HIKMICRO

HM-P201-MACRO

Thermography Camera Macro Lens

The HIKMICRO HM-P201-MACRO macro lens allows you to spot potential design flaws, evaluate PCB hot spots, and inspect small electronic components. Easily clips onto HIKMICRO Pocket-series thermal imaging cameras.

HIKMICRO HM-P201-MACRO macro lens is compatible with the Pocket series (Pocket1, Pocket2) thermography cameras.

Key Features

- High Accuracy: Max. (± 3°C/5.4°F, ± 3%), for object temperature between 0°C (32°F) to 150°C (302°F)
- See Smaller: Small details are clearly visible, imaging the target as small as 100 μm × 100 μm
- Easy installation: Easy to attach the macro lens to compatible cameras
- No Calibration Required: Ready to use once installed, saves the hassle of sending the camera to the manufacturer to calibrate the lens

Specification

THERMAL MODULE	
FOCAL LENGTH	4.1 mm
FOV (FIELD OF VIEW)	47.6° (H) × 36.1° (V)
IFOV (SPATIAL RESOLUTION)	2.93 mrad
FOCUSING DISTANCE	30 mm ± 1 mm (1.18" ± 0.04")
MIN. IMAGING OBJECT SIZE	100 μm × 100 μm
MIN. TEMPERATURE OBJECT SIZE	500 μm × 500 μm
MAGNIFICATION	0.12x
MEASUREMENT AND ANALYSIS	
OBJECT TEMPERATURE RANGE	-20°C to 150°C (-4°F to 302°F)
ACCURACY	Max. (± 3°C/5.4°F, ± 3%), for object temperature between 0°C (32°F) to 150°C (302°F)
GENERAL	
WORKING TEMPERATURE RANGE	-20°C to 50°C (-4°F to 122°F)
WEIGHT	9 g (0.02 lb)
DIMENSION	44.2 mm × 25.16 mm × 87.2 mm (1.74" × 0.99" × 3.43")

Available Model

HM-P201-MACRO

Dimension

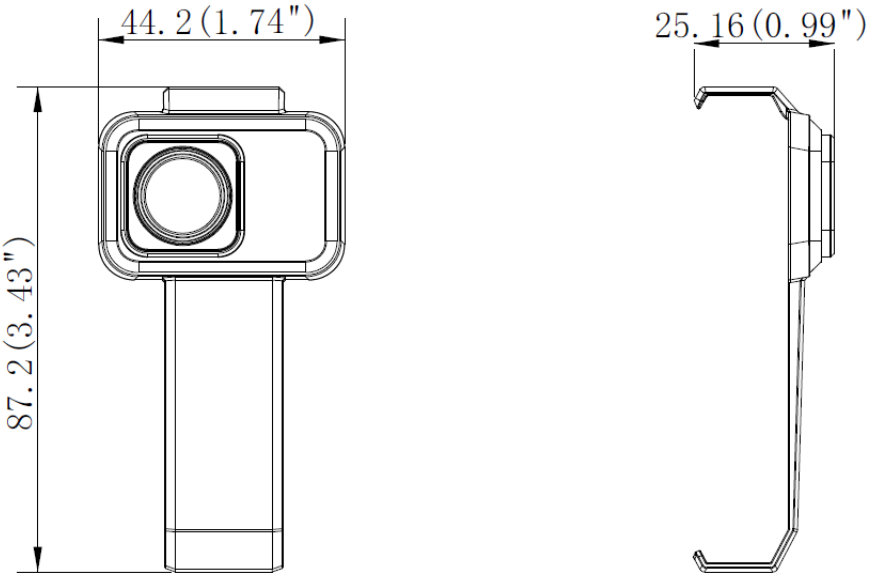

Unit：mm (Inch)

COMPLIANCE NOTICE: The thermal series products might be subject to export controls in various countries or regions, including without limitation, the United States, European Union, United Kingdom and/or other member countries of the Wassenaar Arrangement. Please consult your professional legal or compliance expert or local government authorities for any necessary export license requirements if you intend to transfer, export, re-export the thermal series products between different countries.

HIKMICRO

HIKMICRO Thermography hikmicro_thermography HIKMICRO Thermography HIKMICRO info@hikmicrotech.com http://hikmicrotech.com/en

room 313, unit B,duilding 2,399 danfeng road,xixing subdistrict,binjiang district,hangzhou,zhejiang
@hangzhou microimage software co.,Ltd .2020 | data subject to change without notice!