Trail Camera M15

User Manual

Contact Us

Table of Contents

Chapter 1 Overview **1**
1.1 Device Description 1
1.2 Main Function 1
1.3 Appearance 2
1.3.1 Component 2
1.3.2 Indicator 4
Chapter 2 Preparation **5**
2.1 Install Battery 5
2.1.1 Battery Instruction 5
2.1.2 Battery Installation 5
2.2 Install SD Card 5
2.3 Reinstall SIM Card (Optional) 6
2.4 Install Antenna 7
2.5 Install HIKMICRO Sight 8
2.6 Add Device 8
2.7 Firmware Upgrade 9
2.8 Mount Device 9
2.8.1 Mount Device with Strap 9
2.8.2 Mount Device on Tripod (Optional) 9
Chapter 3 Device Settings **11**
3.1 Remote Control 11
3.2 Set Camera Mode 11
3.3 Working Time 12
3.4 Scheduled Shot 12
3.5 Shot Settings 13
3.5.1 Burst Shot 13
3.5.2 Delayed Shot 13
3.6 PIR Sensitivity 13
3.7 Flash Output 14
3.8 Max. Pics to Upload/Day 14
3.9 Edit Device Name 14

Chapter 4 System Settings **16**
4.1 GPS Service 16
4.2 Set Date Format 16
4.3 SD Overwriting Cycle 16
4.4 View Device Information 16
4.5 Restore Device 17
4.6 Delete Device 17
Chapter 5 File Management **18**
5.1 View Files 18
5.2 Edit Files 18
5.3 Filter Files 19
5.4 Export Files 20
Safety Instruction **21**
Legal Information **23**
Regulatory Information **24**

Chapter 1 Overview

1.1 Device Description

HIKMICRO Trail Camera M15 is a powerful and robust 4G cellular trail camera. It can be triggered by the movement of animals with a highly sensitive Passive Infrared (PIR) motion sensor. It takes true living color photos or video clips during the day and super clear black and white images or video clips at night. The captured photos and video clips can be transmitted to smart phones through the 4G cellular network anytime anywhere.

1.2 Main Function

- Convenient 4G network reception and transmission: M15 supports 4G cellular network, viewing captured photo directly via HIKMICRO Sight app.
- Photo browsing and category management: Browse and manage the captured images and videos in the album.
- Rich yet ease-to-use functions via HIKMICRO Sight app: M15 supports managing camera settings and checking camera status.
- Remote Control: Set the interval of receiving captured pictures and videos on app, or synchronizing settings. See ***3.1 Remote Control***.

1.3 Appearance

1.3.1 Component

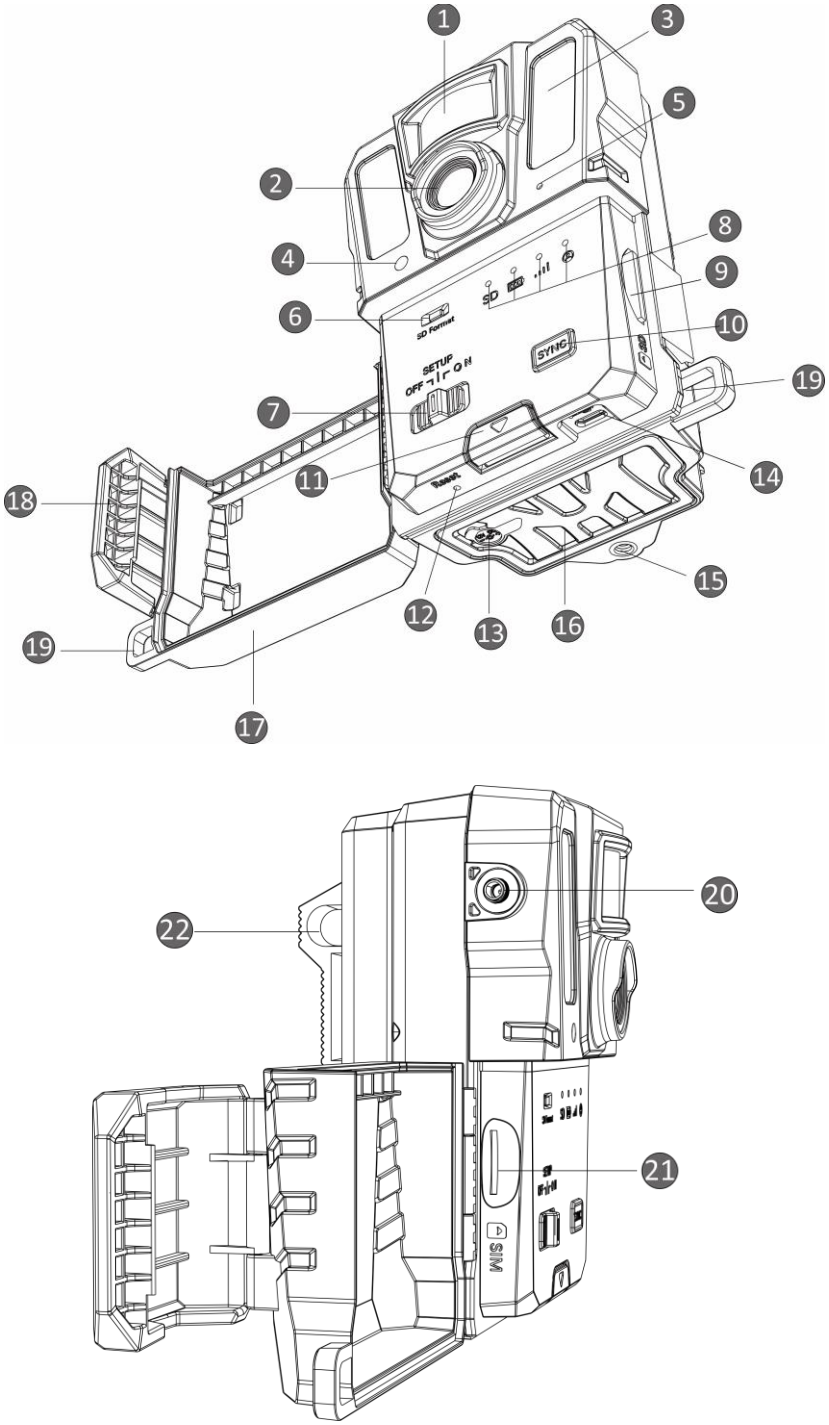

Figure 1-1 Components of Trail Camera

Table 1-1 Component Description

No.	Component	Function
1	PIR Sensor	Detects movements of targets and triggers captures.
2	Lens	Views targets.
3	Infrared Light	Helps to view targets clearly in dark environment.
4	Light Sensor	Senses ambient brightness. ** Device works normally in setup mode if the indicator stays solid red.*
5	Microphone	Records sound.
6	SD Card Format	Hold to format the SD card.
7	On/Off/Setup Switch	● On/Off: Turn on/off the device. ● Setup: Switch to this status to start app configuration.
8	Indicators	● Green: In good working status. ● Yellow/Red: Exception occurs. ** For detailed explanations, see* **Note** In setup mode, if you do not operate the device for more than 3 min, the device will automatically enter working mode. **1.3.2 Indicator**
9	SD Card Slot	To install SD card in it.
10	Synchronization Button	Press to synchronize the settings on app and trigger manual capture in setup mode.
11	Release Button	Releases the battery compartment.
12	Reset	To restore default settings.
13	Power Interface	To connect to the external power source (12 VDC).
14	Type-C Interface	To transmit data with a type-C cable.
15	Tripod Mount	For standard 1/4” tripod mount.
16	Battery Compartment	Holds batteries.
17	Protective Cover	Protects buttons and components.
18	Cover Latch	Locks the protective cover.
19	Lock Hole	To lock the protective cover with a strap.
20	Antenna Interface	To connect the antenna.

21	SIM Card Slot	To install the SIM card in it.
22	Strap Attachment Points	To thread the strap through the holes.

Note

In setup mode, if you do not operate the device for more than 3 min, the device will automatically enter working mode.

1.3.2 Indicator

The indicator description of the device is explained as follows.

Table 1-2 Indicator Description

Icon	Description	Status
SD	SD Card Indicator	**Solid Green:** SD card in good status. **Flashing Green:** In debug mode or firmware upgrade. **Yellow:** SD card exception. **Red:** No SD card. **Off:** SD card format.
	Battery Indicator	**Green:** Battery level is higher than 80%. **Yellow:** Battery level is between 20% and 80%. **Red:** Battery level is lower than 20%. **Flashing Red:** Device powers off after 5 s.
	Signal Indicator	**Solid Green:** Optimal signal. **Yellow:** Acceptable signal. **Red:** Insufficient signal. **Flashing Red:** No SIM card/not Mega SIM card/ communication exception.
	User Account Indicator	**Flashing Green:** Connecting to server. **Solid Green:** User account bound, and connects to server communication successfully. **Flashing Red:** User account bound, but connecting to server communication failed. **Solid Red:** User account not bound.

Note

If all indicators turn green first and then off, it means the device is performing resetting.

Chapter 2 Preparation

2.1 Install Battery

2.1.1 Battery Instruction

- Make sure your batteries can work normally in the temperature range of -20 °C to 55 °C (-4 °F to 131 °F).
- Remove batteries if you aren't making use of the device for a long time.
- Device supports rechargeable or dry AA batteries. The required battery voltage is 1.5 V to 2 V.
- The battery life varies according to different function settings.

2.1.2 Battery Installation

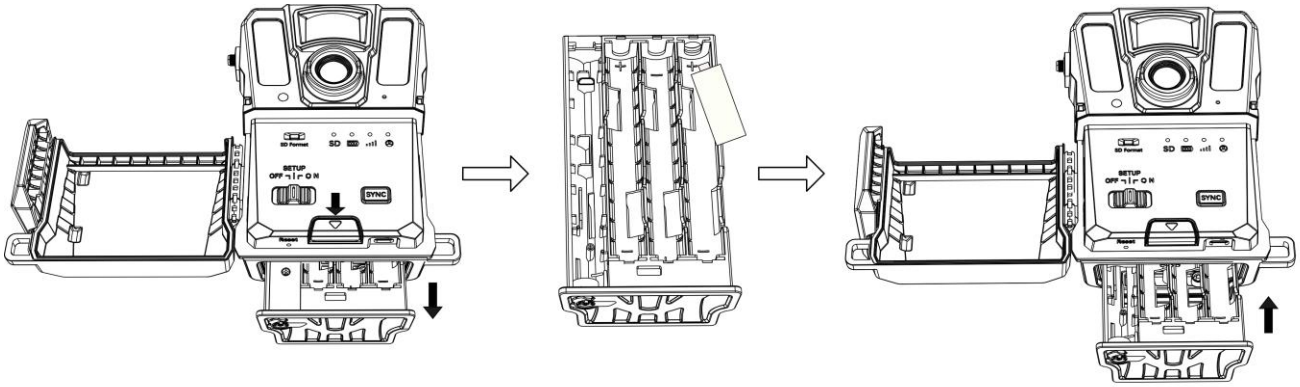

Figure 2-1 Install Batteries

Steps

1. Press the battery compartment release button.
2. Pull out the battery compartment.
3. Install six or twelve AA batteries according to the positive and negative marks.
4. Insert the battery compartment until it clicks into the locked position.

2.2 Install SD Card

Note

- Pay special attention to the installation direction, or the SD card will be stuck in the slot.
- The SD card space shall not exceed 64 GB, or the device cannot detect the SD card status accurately.

- The SD card size shall be 32 mm × 24 mm.

Steps

1. Make sure the installation direction of the SD card is correct (as shown in the picture).
2. Insert the SD card until it clicks into the locked position.

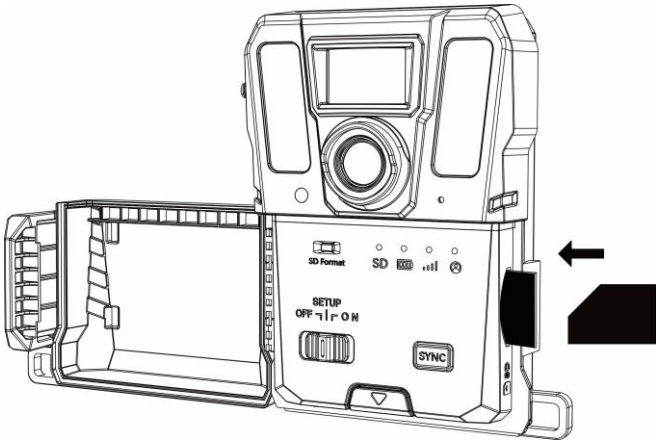

Figure 2-2 Install SD Card

2.3 Reinstall SIM Card (Optional)

Note

- The SIM card has been installed in the device. DO NOT reinstall the SIM card if unnecessary.
- Pay special attention to the installation direction, or the SIM card will be stuck in the slot.

Steps

1. Push the SIM card inwards and release it until you hear a click. Remove the SIM card as it pops up.
2. Make sure the installation direction of the SIM card is correct (as shown in the picture).
3. Insert a SIM card until it clicks into the locked position.

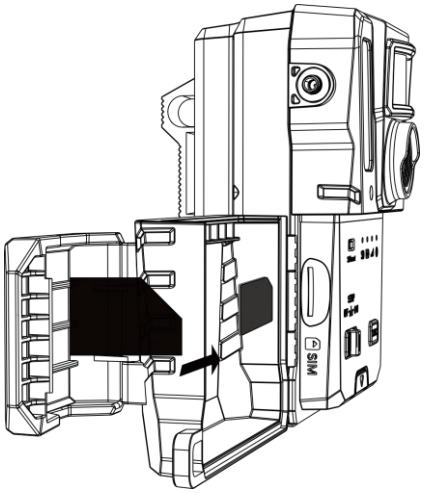

Figure 2-3 Install SIM Card

2.4 Install Antenna

Install the antenna to magnify the signal in outdoor environment, such as forest.

Steps

1. Align the thread hole on the antenna to the antenna holder.
2. Rotate the antenna clockwise to fix it to the device.

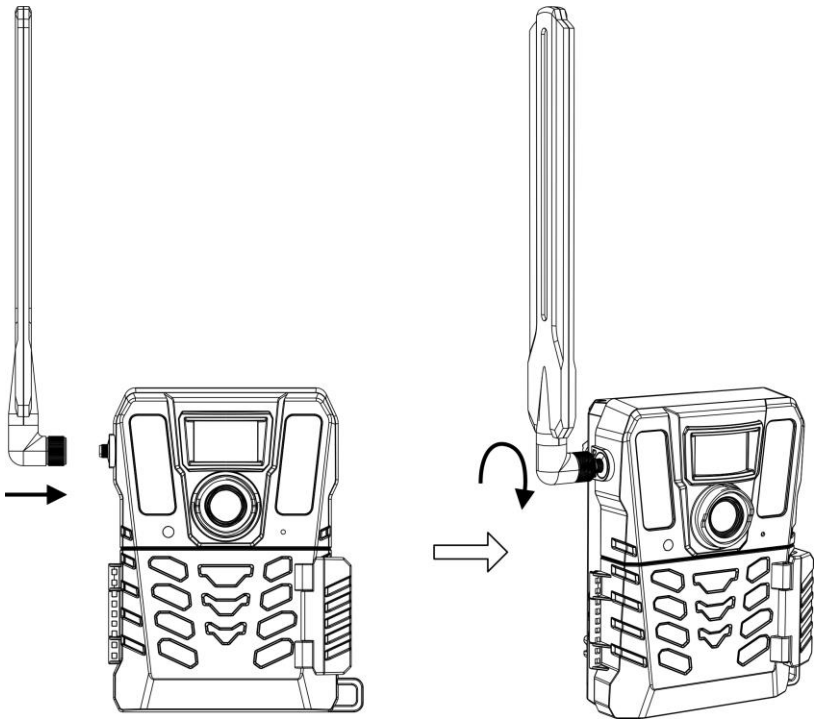

Figure 2-4 Install Antenna

2.5 Install HIKMICRO Sight

Search HIKMICRO Sight on App Store (iOS System) or Google Play™ (Android System) to download it, or scan the QR code to download and install the app.

Android System

iOS System

2.6 Add Device

Before You Start

- Register a user account and log in according to prompts.
- Check the indicators and switch device status to **Setup** before you add your device.

Steps

1. Tap ＋ at the right top corner, and select trail camera.
2. Find the QR code on the trail camera.

Figure 2-5 Find QR Code

3. Tap **Scan QR Code** to scan the QR code to add the device.

Start configuring parameters on your app after the user account indicator stays green on the device.

Note

Each device can just be bound to one user account. If you want to rebind it to another user account, please contact technical support for help.

2.7 Firmware Upgrade

Trail camera supports find the latest firmware and upgrade it via the HIKMICRO SIGHT APP. Before upgrading, please confirm that the camera battery capacity is more than 50%.

Note

- When the battery level is lower than 50%, the firmware upgrade is not supported.
- If the upgrade fails, the device will reboot and try the upgrade again.
- The device will reboot after upgrade.

2.8 Mount Device

You can install the device on a tree or pole by strap, or install it on a tripod.

2.8.1 Mount Device with Strap

Steps

1. Thread the strap through the strap attachment points.
2. Fasten the strap on a tree trunk or pole.

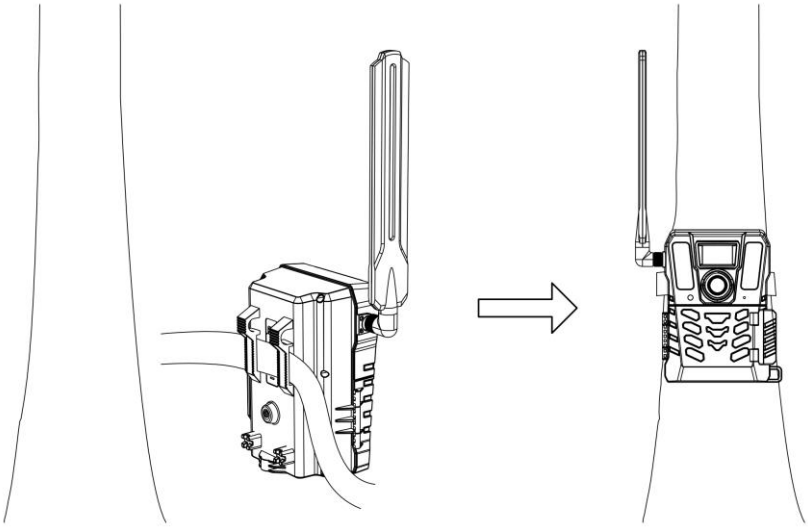

Figure 2-6 Install Device Outdoors

2.8.2 Mount Device on Tripod (Optional)

Install the device on a tripod. Adjust the device position as needed.

Note

The tripod is not included in the package. Please purchase it separately. The size of the tripod

mount interface is 1/4”.

Chapter 3 Device Settings

You can configure parameters such as work time, PIR sensitivity, scheduled shot, delayed shot, etc. for the device.

3.1 Remote Control

After configuring the parameters on the app, you can set the interval of receiving captured pictures and videos on app, or synchronizing settings in real time or after a certain period.

Real-Time

The configuration takes effect and the app receives files in real time. **Real-Time** is set by default.

Delay

You can select Delay 0.5 H, Delay 1 H, Delay 2 H, etc. The configuration will take effect and the app receives files after the set time.

Note

In **Setup** mode, if you want to capture images or synchronize the configuration immediately to the trail camera, press **SYNC**.

3.2 Set Camera Mode

You can set the camera mode as photo, video, or photo and video.

Photo

Device captures images and sends them to the server. You can set the capture resolution in **Image Resolution**.

Video

Device records videos and sends them to the server. You can set the video resolution and duration in **Video Resolution**.

Photo and Video

Device captures images first and then records videos. After the device finishes recording, it sends the pictures and videos to the server. You shall set both **Image Resolution** and **Video Resolution**.

Note

- You can set burst shot for photo or photo and video mode. See ***3.5.1 Burst*** **Shot**.
- The videos and images you receive on HIKMICRO Sight are thumbnail ones.

3.3 Working Time

You can set two real-time working periods for the PIR and scheduled shot.

Steps

1. Tap **Working Time 1** to enter the setting interface.
2. Tap to enable this function.
3. Set the **Start Time** and **End Time**, and tap **Confirm**.

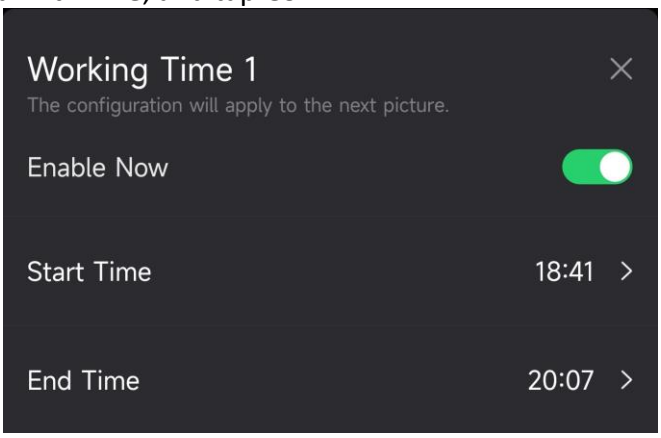

Figure 3-1 Set Working Time

4. Repeat above steps to set the other working time, **Working Time 2**.

Result

The device will trigger PIR and scheduled shot during the set time, for example, from 18:41 to 20:07.

3.4 Scheduled Shot

You can set the interval of taking pictures or videos automatically no matter the PIR is on or off.

Steps

1. Tap **Scheduled Shot** to enter the setting interface.
2. Tap to enable this function.
3. Set the scheduled capture or recording time, and tap **Confirm**.

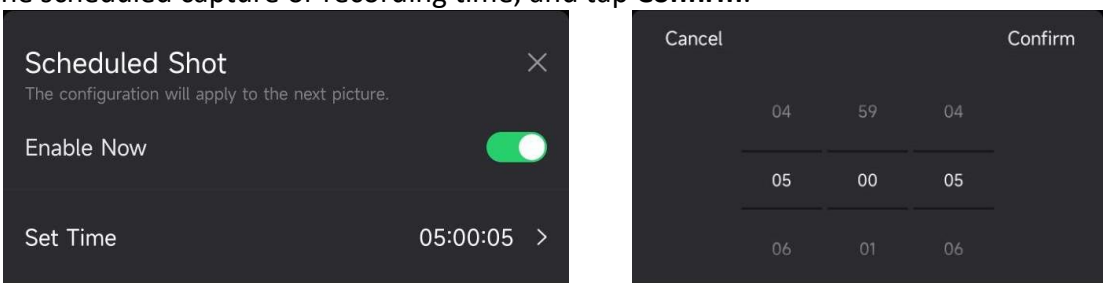

Figure 3-2 Set Scheduled Shot

Result

Device will capture images or record videos automatically after the set period.

3.5 Shot Settings

Several shot modes such as burst shot and delayed shot can be configured for trail camera.

3.5.1 Burst Shot

Device captures one, two, or three images continuously, and sends the first captured images to the server.

Note

This function is not supported when the camera mode is set as **Video**.

3.5.2 Delayed Shot

Delayed shot allows you to set the time interval between each detection before the camera records the next photo or video.

Steps

1. Tap **Delayed Shot** to enter the setting interface.
2. Tap to enable this function.
3. Set the delayed time for capturing or recording, and tap **Confirm**.

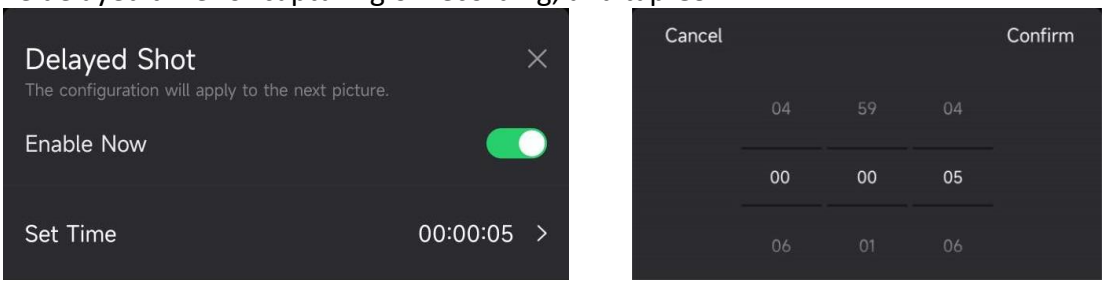

Figure 3-3 Set Delayed Shot

Result

The capture and video recording will be triggered again after a certain period. For example, the device captures images again after 5 s.

3.6 PIR Sensitivity

PIR refers to Passive Infrared, which can detect target movements. PIR sensitivity allows you to set the detection sensitivity of the device. The higher the value is, the easier the device can detect targets.

3.7 Flash Output

Adjust the power of the infrared light.

3.8 Max. Pics to Upload/Day

Set the max. number of pictures that can be uploaded to the cloud album per day.

Steps

1. Tap **Max. Pics to Upload/Day** to enter the setting interface.
2. Enter the number of pictures (1 to 99) to be uploaded per day.
3. Tap **Confirm**.

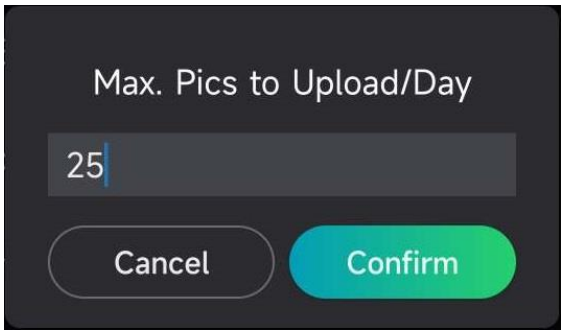

Figure 3-4 Set Max. Pics to Upload/Day

What to Do Next

For viewing the uploaded files, see ***5.1 View* Files**.

3.9 Edit Device Name

You can change name for your device.

Steps

1. Tap **Device Details** to enter the setting interface.
2. Tap **Camera Name**.
3. Enter a new name for your camera, and tap **Confirm**.

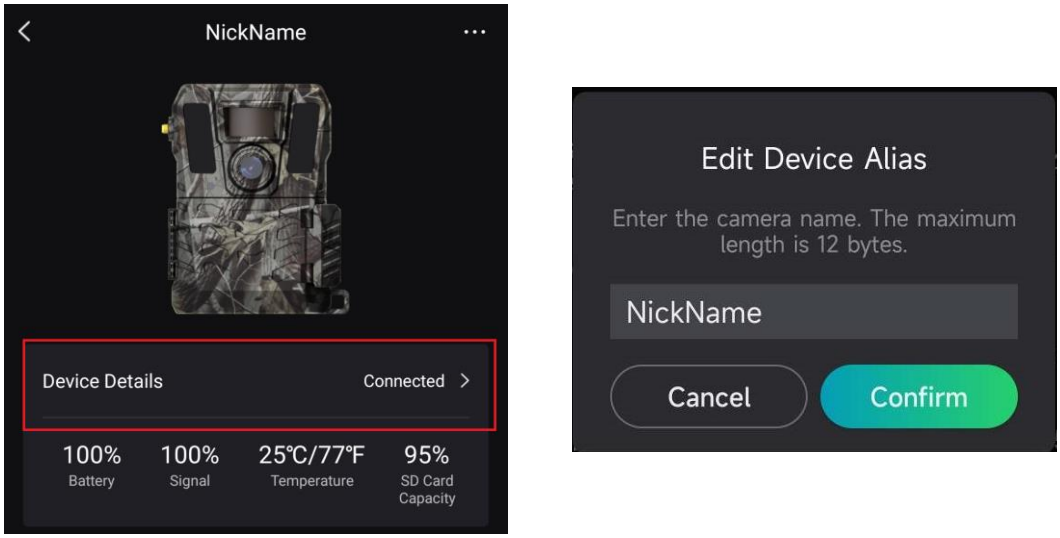

Figure 3-5 Edit Device Name

Chapter 4 System Settings

4.1 GPS Service

You can enable **GPS Service** to get the real-time device location. If you turn off GPS service, the location coordinates for pictures/videos and real-time device location will be unavailable.
Zoom in the map by tapping + , and zoom out the map by tapping − .

4.2 Set Date Format

Go to **Device Settings** and tap **Date Format**. MM-DD-YY and DD-MM-YY are selectable.

4.3 SD Overwriting Cycle

SD Overwriting Cycle helps to manage the SD card capacity. Tap to enable this function.

On

The earliest files stored in the SD card will be deleted automatically when the SD card capacity will be full.

Off

The device will shut down if the SD card capacity is full.

4.4 View Device Information

Tap **Device Details** to enter the device information interface, then you can view the device information such as release date, SIM ID, remote control mode, SD card capacity, etc. You can also view some of the information on home page.

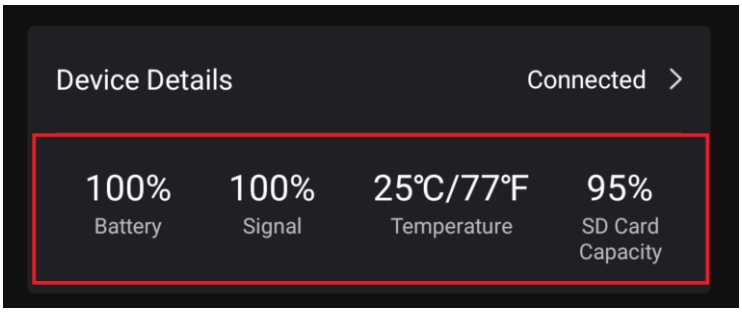

Figure 4-1 View Device Information

4.5 Restore Device

Go to **Device Settings** and tap **Restore Defaults** at the bottom of the page. Select a date format as required.
You can also press the Reset button on the device with an ejection pin to reset the device. See Reset button in ***1.3*** **Appearance**.

4.6 Delete Device

Steps

1. Tap ••• on the left top of the interface.
2. Tap **Delete Device**.
3. Tap **Confirm** to delete the device, or tap **Cancel** to cancel the operation.

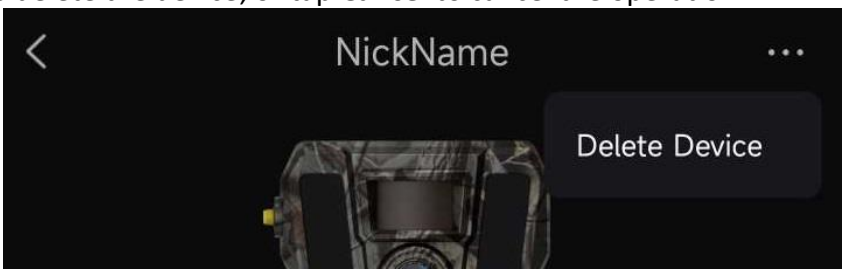

Figure 4-2 Delete Device

Note

All data on the device (pictures, videos, purchase plan, etc.) will be synchronously deleted.

Chapter 5 File Management

5.1 View Files

You can view the captured pictures and recorded videos in cloud album on your phone.
Tap **Cloud Album** on home page to enter the cloud album.
Or tap **Media** at the bottom of the home page to enter the cloud album.

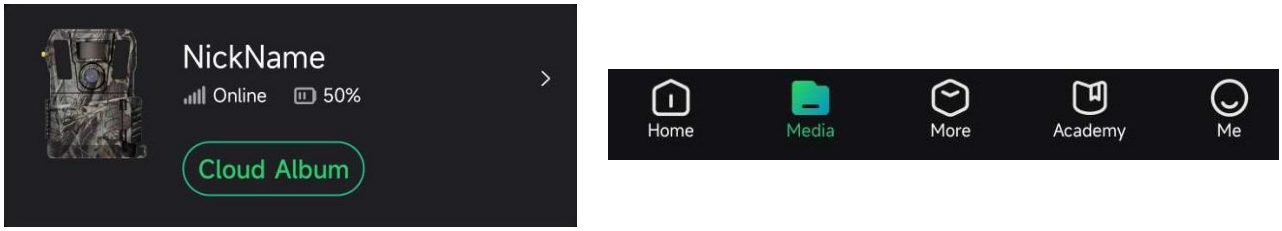

Figure 5-1 Enter Cloud Album

5.2 Edit Files

The captured images and recorded videos are saved in the cloud album. You can view file information, attach tags for files, download files to local albums, delete files, etc.

Task	Operations
View File Information	1. Tap to open a file. 2. Tap to view file information, such as file size, received time, and tag. **Note** You can edit the tag here for the file.
Attach Tags	1. Tap to open a file. 2. Tap to enter the tag interface. 3. Select tags for the file. At most five tags can be attached. **Note** You can customize tags for your files.
Download Files	1. Tap , and tap to select one or multiple files to be downloaded. 2. Tap . A prompt box appears on the interface. 3. Tap **OK** to download the selected files.

Task	Operations
	You can also open a file, and tap to download a single file.
HD Picture	Tap HD to purchase to a HD image plan.
Delete Files	1. Tap , and tap to select one or multiple files to be deleted. 2. Tap . A prompt box appears on the interface. 3. Tap **OK** to delete the selected files. You can also open a file, and tap to delete a single file.

Note

Tap , and tap **Select All** to select all files, and tap **Deselect All** to cancel the selection.

5.3 Filter Files

If you attach tags for your files, you can filer your files by setting parameters to find the target ones quickly.

Steps

1. In cloud album, tap Filter .
2. Set the time period for the target images and videos.
3. Select the tags you have attached to the target images and videos.
4. Tap **OK**. The files that meet the filter conditions will be displayed in cloud album

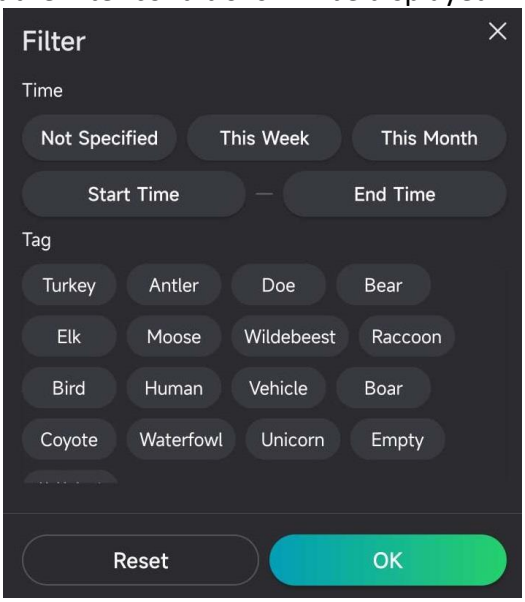

Figure 5-2 Filter Files

5.4 Export Files

You can export HD videos and pictures to your PC via the type-C cable, or download thumbnail pictures to local albums on your phone via HIKMICRO Sight.

Steps

1. Connect the device and PC with a type-C cable.
2. Open computer disk and select the disk of device. Go to the **DCIM** folder and find your captured images and videos.
3. Select and copy the files to PC.
4. Disconnect the device from your PC.

Note

- When you connect the device to PC for the first time, it installs the drive program automatically.
- For downloading thumbnail pictures via HIKMICRO Sight, see the user manual of the app for detailed operation.

Safety Instruction

These instructions are intended to ensure that user can use the product correctly to avoid danger or property loss.

Laws and Regulations

- Use of the product must be in strict compliance with the local electrical safety regulations.

Symbol Conventions

The symbols that may be found in this document are defined as follows.

Symbol	Description
Danger	Indicates a hazardous situation which, if not avoided, will or could result in death or serious injury.
Caution	Indicates a potentially hazardous situation which, if not avoided, could result in equipment damage, data loss, performance degradation, or unexpected results.
Note	Provides additional information to emphasize or supplement important points of the main text.

Transportation

- Keep the device in original or similar packaging while transporting it.
- Keep all wrappers after unpacking them for future use. In case of any failure occurred, you need to return the device to the factory with the original wrapper. Transportation without the original wrapper may result in damage on the device and the company shall not take any responsibilities.
- DO NOT drop the product or subject it to physical shock. Keep the device away from magnetic interference.

Power Supply

- The input voltage for the device should meet the Limited Power Source (12 VDC, 2 A) according to the IEC61010-1 or IEC62368 standard. Please refer to actual products and technical specifications for detailed information.
- The power source should meet limited power source or PS2 requirements according to IEC 60950-1 OR IEC 62368-1 standard.
- For the device without a supplied power adapter, use the power adapter provided by a qualified manufacturer. Refer to the product specification for detailed power requirements.
- Make sure the plug is properly connected to the power socket.
- DO NOT connect multiple devices to one power adapter, to avoid over-heating or fire hazards caused by overload.

Maintenance

- If the product does not work properly, please contact your dealer or the nearest service center.

We shall not assume any responsibility for problems caused by unauthorized repair or maintenance.

- Wipe the device gently with a clean cloth and a small quantity of ethanol, if necessary.
- If the equipment is used in a manner not specified by the manufacturer, the protection provided by the device may be impaired.
- It is recommended to reboot the device every 2 hours when using it to ensure the device performance.

Using Environment

- Make sure the running environment meets the requirement of the device. The operating temperature shall be -20 °C to 55 °C (-4 °F to 131 °F), and the operating humidity shall be 5% to 90%.
- Place the device in a dry and well-ventilated environment.
- DO NOT expose the device to high electromagnetic radiation or dusty environments.
- DO NOT aim the lens at the sun or any other bright light.
- When any laser equipment is in use, make sure that the device lens is not exposed to the laser beam, or it may burn out.
- Avoid equipment installation on vibratory surface or places subject to shock (neglect may cause equipment damage).

Emergency

- If smoke, odor, or noise arises from the device, immediately turn off the power, unplug the power cable, and contact the service center.

Manufacture Address

Room 313, Unit B, Building 2, 399 Danfeng Road, Xixing Subdistrict, Binjiang District, Hangzhou, Zhejiang 310052, China
Hangzhou Microimage Software Co., Ltd.

Legal Information

Read all information and instructions in this document carefully before using the device and keep it for further reference.
For more device information and instructions, please visit our website at www.hikmicrotech.com/.
©2023 Hangzhou Microimage Software Co., Ltd. All rights reserved.

About this Manual

The Manual includes instructions for using and managing the Product. Pictures, charts, images and all other information hereinafter are for description and explanation only. The information contained in the Manual is subject to change, without notice, due to firmware updates or other reasons. Please find the latest version of this Manual at the HIKMICRO website (www.hikmicrotech.com/).
Please use this Manual with the guidance and assistance of professionals trained in supporting the Product.

Trademarks Acknowledgement

HIKMICRO and other HIKMICRO's trademarks and logos are the properties of HIKMICRO in various jurisdictions.
Other trademarks and logos mentioned are the properties of their respective owners.

LEGAL DISCLAIMER

TO THE MAXIMUM EXTENT PERMITTED BY APPLICABLE LAW, THIS MANUAL AND THE PRODUCT DESCRIBED, WITH ITS HARDWARE, SOFTWARE AND FIRMWARE, ARE PROVIDED "AS IS" AND "WITH ALL FAULTS AND ERRORS". HIKMICRO MAKES NO WARRANTIES, EXPRESS OR IMPLIED, INCLUDING WITHOUT LIMITATION, MERCHANTABILITY, SATISFACTORY QUALITY, OR FITNESS FOR A PARTICULAR PURPOSE. THE USE OF THE PRODUCT BY YOU IS AT YOUR OWN RISK. IN NO EVENT WILL HIKMICRO BE LIABLE TO YOU FOR ANY SPECIAL, CONSEQUENTIAL, INCIDENTAL, OR INDIRECT DAMAGES, INCLUDING, AMONG OTHERS, DAMAGES FOR LOSS OF BUSINESS PROFITS, BUSINESS INTERRUPTION, OR LOSS OF DATA, CORRUPTION OF SYSTEMS, OR LOSS OF DOCUMENTATION, WHETHER BASED ON BREACH OF CONTRACT, TORT (INCLUDING NEGLIGENCE), PRODUCT LIABILITY, OR OTHERWISE, IN CONNECTION WITH THE USE OF THE PRODUCT, EVEN IF HIKMICRO HAS BEEN ADVISED OF THE POSSIBILITY OF SUCH DAMAGES OR LOSS.
YOU ACKNOWLEDGE THAT THE NATURE OF THE INTERNET PROVIDES FOR INHERENT SECURITY RISKS, AND HIKMICRO SHALL NOT TAKE ANY RESPONSIBILITIES FOR ABNORMAL OPERATION, PRIVACY LEAKAGE OR OTHER DAMAGES RESULTING FROM CYBER-ATTACK, HACKER ATTACK, VIRUS INFECTION, OR OTHER INTERNET SECURITY RISKS; HOWEVER, HIKMICRO WILL PROVIDE TIMELY TECHNICAL SUPPORT IF REQUIRED.
YOU AGREE TO USE THIS PRODUCT IN COMPLIANCE WITH ALL APPLICABLE LAWS, AND YOU ARE SOLELY RESPONSIBLE FOR ENSURING THAT YOUR USE CONFORMS TO THE APPLICABLE LAW. ESPECIALLY, YOU ARE RESPONSIBLE, FOR USING THIS PRODUCT IN A MANNER THAT DOES NOT INFRINGE ON THE RIGHTS OF THIRD PARTIES, INCLUDING WITHOUT LIMITATION, RIGHTS OF PUBLICITY, INTELLECTUAL PROPERTY RIGHTS, OR DATA PROTECTION AND OTHER PRIVACY RIGHTS. YOU SHALL NOT USE THIS PRODUCT FOR ILLEGAL HUNTING ANIMALS, INVASION OF PRIVACY OR ANY OTHER PURPOSE WHICH IS ILLEGAL OR DETRIMENTAL TO THE PUBLIC INTEREST. YOU SHALL NOT USE THIS PRODUCT FOR ANY PROHIBITED END-USES, INCLUDING THE DEVELOPMENT OR PRODUCTION OF WEAPONS OF MASS DESTRUCTION, THE DEVELOPMENT OR PRODUCTION OF CHEMICAL OR BIOLOGICAL WEAPONS, ANY ACTIVITIES IN THE CONTEXT RELATED TO ANY NUCLEAR EXPLOSIVE OR UNSAFE NUCLEAR FUEL-CYCLE, OR IN SUPPORT OF HUMAN RIGHTS ABUSES. IN THE EVENT OF ANY CONFLICTS BETWEEN THIS MANUAL AND THE APPLICABLE LAW, THE LATTER PREVAILS.

Regulatory Information

These clauses apply only to the products bearing the corresponding mark or information.

EU/UK Conformity Statement

This product and - if applicable - the supplied accessories too are marked with "CE" and comply therefore with the applicable harmonized European standards listed under the Directive 2014/30/EU (EMCD), Directive 2014/35/EU (LVD), Directive 2011/65/EU (RoHS).

This product and - if applicable - the supplied accessories too are marked with "UKCA" and comply therefore with the following directives: Radio Equipment Regulations 2017, Electromagnetic Compatibility Regulations 2016, Electrical Equipment (Safety) Regulations 2016, the Restriction of the Use of Certain Hazardous Substances in Electrical and Electronic Equipment Regulations 2012.

Frequency Bands and Power (for CE/UKCA)

The frequency bands and modes and the nominal limits of transmitted power (radiated and/or conducted) applicable to this radio device are the following: LTE Band 1: 1920 to 1980 MHz, 25 dBm, class 3; LTE Band 3: 1710 to 1785 MHz, 25 dBm, class 3; LTE Band 7: 2500 to 2570 MHz, 25 dBm, class 3; LTE Band 8: 880 to 915 MHz, 23 dBm, class 3; LTE Band 20: 832 to 862 MHz, 23 dBm, class 3; LTE Band 28: 703 to 748 MHz, 23 dBm, class 3.

Directive 2012/19/EU (WEEE Directive): Products marked with this symbol cannot be disposed of as unsorted municipal waste in the European Union. For proper recycling, return this product to your local supplier upon the purchase of equivalent new equipment, or dispose of it at designated collection points. For more information see: www.recyclethis.info.

According to the Waste Electrical and Electronic Equipment Regulations 2013: Products marked with this symbol cannot be disposed of as unsorted municipal waste in the United Kingdom. For proper recycling, return this product to your local supplier upon the purchase of equivalent new equipment, or dispose of it at designated collection points. For more information see: www.recyclethis.info.

Industry Canada ICES-003 Compliance

Industry Canada ICES-003 Compliance
This device meets the CAN ICES-003 (B)/NMB-003 (B) standards requirements.
This device complies with Industry Canada licence-exempt RSS standard(s). Operation is subject to the following two conditions:
(1) this device may not cause interference, and
(2) this device must accept any interference, including interference that may cause undesired operation of the device.
This equipment complies with IC RSS-102 radiation exposure limits set forth for an uncontrolled environment.

Conformité Industrie Canada ICES-003

Cet appareil répond aux exigences des normes CAN ICES-003 (B)/NMB-003 (B).
Cet appareil est conforme aux normes RSS exemptes de licence d'Industrie Canada. Son fonctionnement est soumis aux deux conditions suivantes :
(1) cet appareil ne doit pas causer d'interférences, et
(2) cet appareil doit accepter toute interférence reçue, notamment les interférences susceptibles d'occasionner un fonctionnement indésirable de l'appareil.
Cet appareil est conforme aux limites d'exposition au rayonnement IC RSS-102 établies pour un environnement non contrôlé.

KC

B급 기기: 이 기기는 가정용(B급) 전자파적합기기로써 주로 가정에서 사용하는 것을 목적으로 하며, 모든 지역에서 사용할 수 있습니다.

HIKMICRO

See the World in a New Way

Facebook: HIKMICRO Outdoor Instagram: hikmicro_outdoor YouTube: HIKMICRO Outdoor LinkedIn: HIKMICRO

Website: www.hikmicrotech.com

E-mail: support@hikmicrotech.com

UD31879B-B