# Handheld Thermography Camera

User Manual

# Legal Information

© 2020 Hangzhou Microimage Software Co., Ltd. All rights reserved.

About this Manual

The Manual includes instructions for using and managing the Product. Pictures, charts, images and all other information hereinafter are for description and explanation only. The information contained in the Manual is subject to change, without notice, due to firmware updates or other reasons. Please find the latest version of this Manual at the HIKMICRO website (www.hikmicrotech.com/).

Please use this Manual with the guidance and assistance of professionals trained in supporting the Product.

**Trademarks Acknowledgement**

HIKMICRO and other HIKMICRO's trademarks and logos are the properties of HIKMICRO in various jurisdictions.

Other trademarks and logos mentioned are the properties of their respective owners.

**LEGAL DISCLAIMER**

TO THE MAXIMUM EXTENT PERMITTED BY APPLICABLE LAW, THIS MANUAL AND THE PRODUCT DESCRIBED, WITH ITS HARDWARE, SOFTWARE AND FIRMWARE, ARE PROVIDED "AS IS" AND "WITH ALL FAULTS AND ERRORS". HIKMICRO MAKES NO WARRANTIES, EXPRESS OR IMPLIED, INCLUDING WITHOUT LIMITATION, MERCHANTABILITY, SATISFACTORY QUALITY, OR FITNESS FOR A PARTICULAR PURPOSE. THE USE OF THE PRODUCT BY YOU IS AT YOUR OWN RISK. IN NO EVENT WILL HIKMICRO BE LIABLE TO YOU FOR ANY SPECIAL, CONSEQUENTIAL, INCIDENTAL, OR INDIRECT DAMAGES, INCLUDING, AMONG OTHERS, DAMAGES FOR LOSS OF BUSINESS PROFITS, BUSINESS INTERRUPTION, OR LOSS OF DATA, CORRUPTION OF SYSTEMS, OR LOSS OF DOCUMENTATION, WHETHER BASED ON BREACH OF CONTRACT, TORT (INCLUDING NEGLIGENCE), PRODUCT LIABILITY, OR OTHERWISE, IN CONNECTION WITH THE USE OF THE PRODUCT, EVEN IF HIKMICRO HAS BEEN ADVISED OF THE POSSIBILITY OF SUCH DAMAGES OR LOSS.

YOU ACKNOWLEDGE THAT THE NATURE OF THE INTERNET PROVIDES FOR INHERENT SECURITY RISKS, AND HIKMICRO SHALL NOT TAKE ANY RESPONSIBILITIES FOR ABNORMAL OPERATION, PRIVACY LEAKAGE OR OTHER DAMAGES RESULTING FROM CYBER-ATTACK, HACKER ATTACK, VIRUS INFECTION, OR OTHER INTERNET SECURITY RISKS; HOWEVER, HIKMICRO WILL PROVIDE TIMELY TECHNICAL SUPPORT IF REQUIRED.

YOU AGREE TO USE THIS PRODUCT IN COMPLIANCE WITH ALL APPLICABLE LAWS, AND YOU ARE SOLELY RESPONSIBLE FOR ENSURING THAT YOUR USE CONFORMS TO THE APPLICABLE LAW. ESPECIALLY, YOU ARE RESPONSIBLE, FOR USING THIS PRODUCT IN A MANNER THAT DOES NOT INFRINGE ON THE RIGHTS OF THIRD PARTIES, INCLUDING WITHOUT LIMITATION, RIGHTS OF PUBLICITY, INTELLECTUAL PROPERTY RIGHTS, OR DATA PROTECTION AND OTHER PRIVACY RIGHTS. YOU SHALL NOT USE THIS PRODUCT FOR ANY PROHIBITED END-USES, INCLUDING THE DEVELOPMENT OR PRODUCTION OF WEAPONS OF MASS DESTRUCTION, THE DEVELOPMENT OR PRODUCTION OF CHEMICAL OR BIOLOGICAL WEAPONS, ANY ACTIVITIES IN THE CONTEXT RELATED TO ANY NUCLEAR EXPLOSIVE OR UNSAFE NUCLEAR FUEL-CYCLE, OR IN SUPPORT OF HUMAN

RIGHTS ABUSES.
IN THE EVENT OF ANY CONFLICTS BETWEEN THIS MANUAL AND THE APPLICABLE LAW, THE LATER PREVAILS.

# Regulatory Information

## FCC Information

Please take attention that changes or modification not expressly approved by the party responsible for compliance could void the user's authority to operate the equipment.
FCC compliance: This equipment has been tested and found to comply with the limits for a Class B digital device, pursuant to part 15 of the FCC Rules. These limits are designed to provide reasonable protection against harmful interference in a residential installation. This equipment generates, uses and can radiate radio frequency energy and, if not installed and used in accordance with the instructions, may cause harmful interference to radio communications. However, there is no guarantee that interference will not occur in a particular installation. If this equipment does cause harmful interference to radio or television reception, which can be determined by turning the equipment off and on, the user is encouraged to try to correct the interference by one or more of the following measures:
—Reorient or relocate the receiving antenna.
—Increase the separation between the equipment and receiver.
—Connect the equipment into an outlet on a circuit different from that to which the receiver is connected.
—Consult the dealer or an experienced radio/TV techniciaan for help
This equipment should be installed and operated with a minimum distance 20cm between the radiator and your body.
FCC Conditions
This device complies with part 15 of the FCC Rules. Operation is subject to the following two conditions:
1. This device may not cause harmful interference.
2. This device must accept any interference received, including interference that may cause undesired operation.

## EU Conformity Statement

This product and - if applicable - the supplied accessories too are marked with "CE" and comply therefore with the applicable harmonized European standards listed under the EMC Directive 2014/30/EU, RE Directive 2014/53/EU,the RoHS Directive 2011/65/EU

2012/19/EU (WEEE directive): Products marked with this symbol cannot be disposed of as unsorted municipal waste in the European Union. For proper recycling, return this product to your local supplier upon the purchase of equivalent new equipment, or dispose of it at designated collection points. For more information see: www.recyclethis.info

2006/66/EC (battery directive): This product contains a battery that cannot be disposed of as unsorted municipal waste in the European Union. See the product documentation for specific battery information. The battery is marked with this symbol, which may include lettering to indicate cadmium (Cd), lead (Pb), or mercury (Hg). For proper recycling, return the battery to your supplier or to a designated collection point. For more information see:www.recyclethis.info

## Industry Canada ICES-003 Compliance

This device meets the CAN ICES-3 (B)/NMB-3(B) standards requirements.

1. This device complies with Industry Canada licence-exempt RSS standard(s). Operation is subject to the following two conditions: this device may not cause interference, and
2. this device must accept any interference, including interference that may cause undesired operation of the device.

1. Le présent appareil est conforme aux CNR d'Industrie Canada applicables aux appareils radioexempts de licence. L'exploitation est autorisée aux deux conditions suivantes : l'appareil ne doit pas produire de brouillage, et
2. l'utilisateur de l'appareil doit accepter tout brouillage radioélectrique subi, même si le brouillage est susceptible d'en compromettre le fonctionnement.

Under Industry Canada regulations, this radio transmitter may only operate using an antenna of a type and maximum (or lesser) gain approved for the transmitter by Industry Canada. To reduce potential radio interference to other users, the antenna type and its gain should be so chosen that the equivalent isotropically radiated power (e.i.r.p.) is not more than that necessary for successful communication.

Conformément à la réglementation d'Industrie Canada, le présent émetteur radio peut fonctionner avec une antenne d'un type et d'un gain maximal (ou inférieur) approuvé pour l'émetteur par Industrie Canada. Dans le but de réduire les risques de brouillage radioélectrique à l'intention des autres utilisateurs, il faut choisir le type d'antenne et son gain de sorte que la puissance isotrope rayonnée équivalente (p.i.r.e.) ne dépasse pas l'intensité nécessaire à l'établissement d'une communication satisfaisante.

This equipment should be installed and operated with a minimum distance 20cm between the radiator and your body.

Cet équipement doit être installé et utilisé à une distance minimale de 20 cm entre le radiateur et votre corps.

# Symbol Conventions

The symbols that may be found in this document are defined as follows.

| Symbol | Description |
|---|---|
| **Danger** | Indicates a hazardous situation which, if not avoided, will or could result in death or serious injury. |
| **Caution** | Indicates a potentially hazardous situation which, if not avoided, could result in equipment damage, data loss, performance degradation, or unexpected results. |
| **Note** | Provides additional information to emphasize or supplement important points of the main text. |

# Safety Instruction

These instructions are intended to ensure that user can use the product correctly to avoid danger or property loss.

## Laws and Regulations

- Use of the product must be in strict compliance with the local electrical safety regulations.

## Transportation

- Keep the device in original or similar packaging while transporting it.
- Keep all wrappers after unpacking them for future use. In case of any failure occurred, you need to return the device to the factory with the original wrapper. Transportation without the original wrapper may result in damage on the device and the company shall not take any responsibilities.
- Do not drop the product or subject it to physical shock. Keep the device away from magnetic interference.

## Power Supply

- Please purchase the charger by yourself. Input voltage should meet the Limited Power Source (5 VDC, 2A) according to the IEC61010-1 standard. Please refer to technical specifications for detailed information.
- Make sure the plug is properly connected to the power socket.
- DO NOT connect multiple devices to one power adapter, to avoid over-heating or fire hazards caused by overload.

## Battery

- Improper use or replacement of the battery may result in explosion hazard. Replace with the same or equivalent type only. Dispose of used batteries in conformance with the instructions provided by the battery manufacturer.
- The built-in battery cannot be dismantled. Please contact the manufacture for repair if necessary.
- For long-term storage of the battery, make sure it is fully charged every half year to ensure the battery quality. Otherwise, damage may occur.

## Maintenance

- If the product does not work properly, please contact your dealer or the nearest service center. We shall not assume any responsibility for problems caused by unauthorized repair or maintenance.
- Wipe the device gently with a clean cloth and a small quantity of ethanol, if necessary.
- If the equipment is used in a manner not specified by the manufacturer, the protection provided by the device may be impaired.

## Using Environment

- Make sure the running environment meets the requirement of the device. The operating temperature shall be -10°C to 50°C (14°F to 122°F), and the operating humidity shall be 90% or less.
- DO NOT expose the device to high electromagnetic radiation or dusty environments.
- DO NOT aim the lens at the sun or any other bright light.

## Emergency

- If smoke, odor, or noise arises from the device, immediately turn off the power, unplug the power cable, and contact the service center.

## Laser Light Supplement Warning

The laser radiation emitted from the device can cause eye injuries, burning of skin or inflammable substances. Before enabling the Light Supplement function, make sure no human or inflammable substances are in front of the laser lens.

## Manufacture Address

Room 313, Unit B, Building 2, 399 Danfeng Road, Xixing Subdistrict,Binjiang District, Hangzhou, Zhejiang 310052, China
Hangzhou Microimage Software Co., Ltd

COMPLIANCE NOTICE: The thermal series products might be subject to export controls in various countries or regions, including without limitation, the United States, European Union, United Kingdom and/or other member countries of the Wassenaar Arrangement. Please consult your professional legal or compliance expert or local government authorities for any necessary export license requirements if you intend to transfer, export, re-export the thermal series products between different countries.

# User Manual of Electrical Version

Scan the QR code to view the user manual on your mobile phone. Note that mobile data charges may apply if Wi-Fi is unavailable.

# Contents

**Chapter 1 Overview** ..... **1**
**1.1 Device Description** ..... 1
**1.2 Main Function** ..... 1
**1.3 Appearance** ..... 2
**Chapter 2 Preparation** ..... **4**
**2.1 Charge Device** ..... 4
**2.1.1 Charge Device via Charging Base** ..... 4
**2.1.2 Charge Device via Cable Interface** ..... 5
**2.2 Power On/Off** ..... 5
**2.2.1 Set Auto Power-off Duration** ..... 6
**2.3 Operation Method** ..... 6
**2.4 Menu Description** ..... 7
**Chapter 3 Display Settings** ..... **8**
**3.1 Focus Lens** ..... 8
**3.2 Set Screen Brightness** ..... 8
**3.3 Set Display Mode** ..... 8
**3.4 Set Palettes** ..... 9
**3.5 Adjust Digital Zoom** ..... 10
**3.6 Display OSD Info** ..... 11
**Chapter 4 Temperature Measurement** ..... **12**
**4.1 Set Thermography Parameters** ..... 12
**4.1.1 Set Unit** ..... 13
**4.2 Set Temperature Range** ..... 13
**4.3 Set Thermography Rule** ..... 13
**4.3.1 Set Point Rule** ..... 14
**4.3.2 Set Line Rule** ..... 15
**4.3.3 Set Frame Rule** ..... 15
**4.3.4 Delete Rules** ..... 16
**4.4 Set Temperature Alarm** ..... 16

**Chapter 5 Picture and Video** ..... **17**
**5.1 Capture Picture** ..... 17
**5.2 Record Video** ..... 18
**5.3 View Recorded Files** ..... 19
**5.4 Export Files** ..... 19
**Chapter 6 Connect Bluetooth** ..... **21**
**Chapter 7 Light Settings** ..... **22**
**7.1 Set LED Light** ..... 22
**7.2 Set Laser** ..... 22
**Chapter 8 HIKMICRO Viewer APP Connection** ..... **23**
**8.1 Connect via Wi-Fi** ..... 23
**8.2 Connect via Hot Spot** ..... 24
**Chapter 9 Maintenance** ..... **25**
**9.1 View Device Information** ..... 25
**9.2 Set Date and Time** ..... 25
**9.3 Upgrade Device** ..... 25
**9.4 Restore Device** ..... 25
**Chapter 10 Appendix** ..... **26**
**10.1 Common Material Emissivity Reference** ..... 26
**10.2 Device Command** ..... 26
**10.3 Device Communication Matrix** ..... 27

# Chapter 1 Overview

## 1.1 Device Description

The handheld thermography camera is a device with both optical images and thermal images. It can do thermography, video recording, snapshot capturing, alarm, and it can connect to Wi-Fi, hotspot and Bluetooth. The built-in high-sensitivity IR detector and high-performance sensor detects the variation of temperature and measure the real-time temperature.
The picture-in-picture technique of the camera and the fusion of optical view and thermal view, enhances the details of the images display. It supports multiple palettes and alarm types. When the detected temperature in the scene does not match with the alarm rules, the device alarms by color of the palette mode automatically. It helps to find the risky part and lower your property loss.
The device is easy to use, and adopts ergonomic design. It is widely applied to substations, electricity prevention detection of companies, and reconnaissance survey of construction field.

## 1.2 Main Function

### Thermography

Device detects the real-time temperature, and display it on the screen.

### Storage

Device is equipped with memory module to store videos, snapshots, and important data.

### Fusion

Device can display fusion of thermal view and optical view.

### Palette and Alarm

Device supports multiple palettes, and you can set the palette mode according to the alarm function.

### Client Software Connection

You can connect the device with client software via Wi-Fi or hot spot. Then you can view live view, capture, and recording, etc. on your phone.

### Bluetooth

Device can be connected to headset via Bluetooth, and you can hear the voice in the recording or capture.

### Digital Zoom

Device supports 1×, 2×, 4×, and 8× digital zoom.

### LED Light

LED light supplement makes the device a torch in required scenarios.

### Laser Light

Long-distance laser light supplement.

## 1.3 Appearance

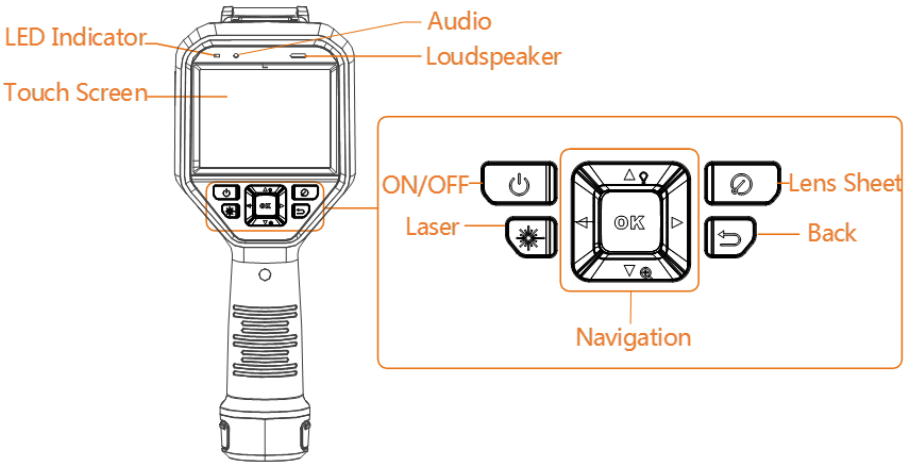


**Figure 1-1 Appearance**

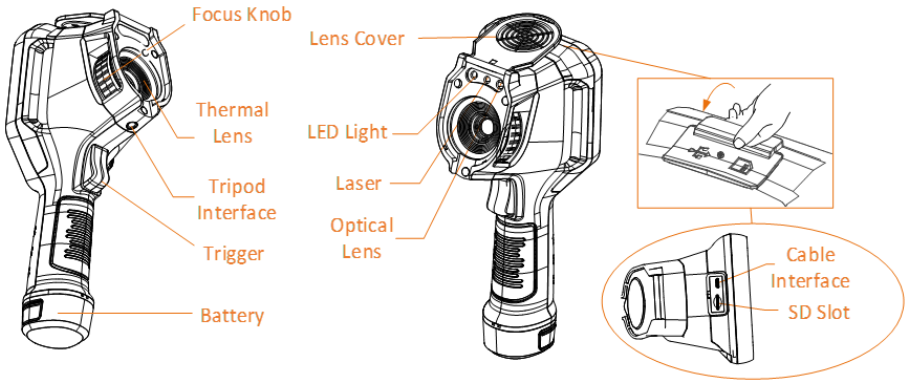


**Table 1-1 Interface Description**

| Component | Function |
|---|---|
| Laser Button | Hold the button to turn on laser, and release the button to turn off laser. |
| Navigation Button | Menu Mode:<br>● Press △,▽, ▷ and ◁ to select parameters.<br>● Press OK to confirm. |

| Component | Function |
|---|---|
| | |
| | Non-Menu Mode:<br>● Press △ to turn on/off the LED light supplement.<br>● Press ▽ to start digital zoom. |
| Lens Sheet Button | Cover the lens to perform the correction. |
| Back Button | Exit the menu or return to previous menu. |
| Focus Knob | Adjust lens focal length. Refer to***Focus Lens***. |
| Trigger | Pull the trigger to capture. Hold the trigger to record videos. |
| Cable Interface | Connect the device to your PC via cable to export files. |

**Caution**

The laser radiation emitted from the device can cause eye injuries, burning of skin or inflammable substances. Before enabling the light supplement function, make sure no human or inflammable substances are in front of the laser lens.

# Chapter 2 Preparation

## 2.1 Charge Device

### 2.1.1 Charge Device via Charging Base

**Steps**

**Note**

- Please charge the device with the cable and power adapter supplied by the manufacturer (or according to the input voltage from the specifications).
- For the first charge, charge the device for 48 to 72 hours when the device is turned on.

1. Hold the device, and press both battery lock catches of the device.

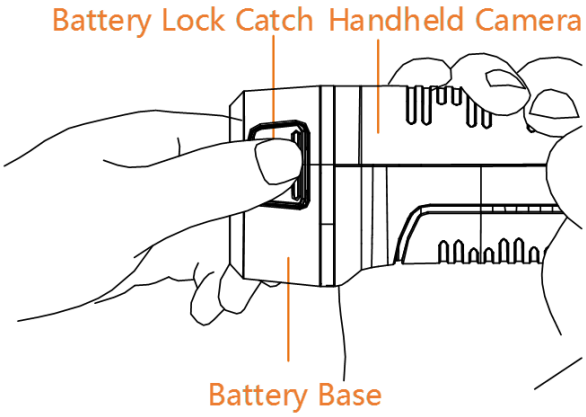


**Figure 2-1 Remove Battery Base**

2. Hold the lock catches, and draw the battery base to take out the battery.
3. Insert the battery into the charging base. You can see the charging status via the pilot lamp on the charging base.

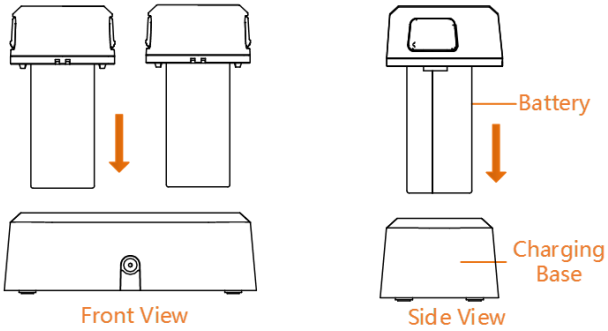


**Figure 2-2 Charge Battery**

4. When the battery is fully charged, draw the battery from the charging base.
5. Align the ribbed piece on battery with the notch of the device, and insert battery into the device.

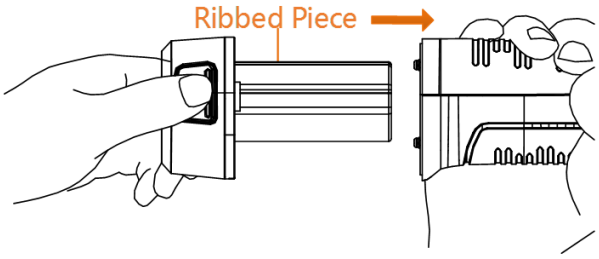


**Figure 2-3 Insert Battery**

### 2.1.2 Charge Device via Cable Interface

**Before You Start**

Please make sure the battery is installed before charging.

**Steps**

1. Open the top cover of the device.
2. Connect the interface and the power adaptor with Type-C or USB cable.

## 2.2 Power On/Off

### Power On

Remove the lens cover, and hold ⏻ for over three seconds to turn on the device. You can observe the target when the interface of the device is stable.

**Note**

It may take at least 30 s until the device is ready for using when you power on it.

### Power Off

When the device is turned on, hold ⏻ for three seconds to power off the device.

## 2.2.1 Set Auto Power-off Duration

Go to **Local Settings** → **Device Settings** → **Auto Power-off Duration Settings** to set the automatic shutdown time for device as required.

# 2.3 Operation Method

The device supports both touch-screen control and button control.

### Touch-screen control

Tap on the screen to set parameters and configurations.

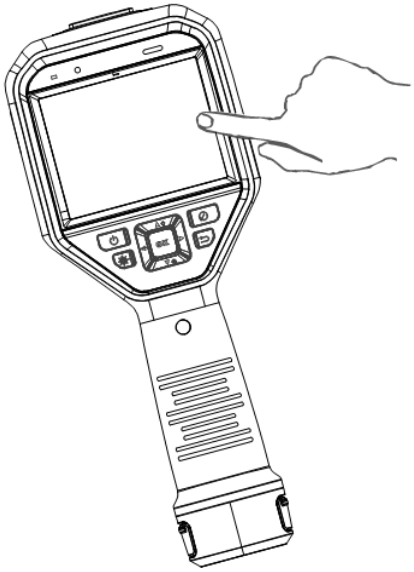

**Figure 2-4 Touch-screen Control**

### Button control

Press the navigation buttons to set parameters and configurations.

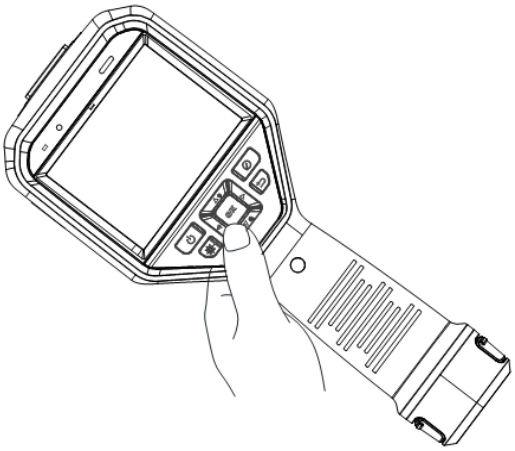

**Figure 2-5 Button Control**

- Press △, ▽, ◁, and ▷ to move the cursor up/down/left/right.
- Press OK to confirm.

## 2.4 Menu Description

In the observation interface, tap the screen or press OK to show the menu bar.

**Figure 2-6 Menu**

# Chapter 3 Display Settings

## 3.1 Focus Lens

Adjust the lens focal length properly before you set any other configurations, or it may affect the image display and temperature accuracy.

**Steps**

1. Power on the device.
2. Aim the device lens to the appropriate scene.
3. Adjust the focus knob clockwise or anticlockwise, see figure below.

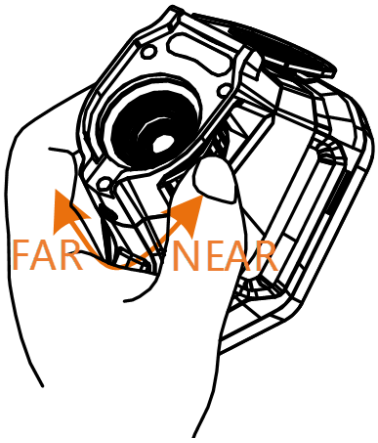


**Figure 3-1 Focus Lens**

**Note**

DO NOT touch the lens to avoid affecting the display effect.

## 3.2 Set Screen Brightness

Go to**Local Settings** → **Device Settings** → **Display Brightness** to set the screen brightness. It can be set as **Low**, **Medium**, or **High**.

## 3.3 Set Display Mode

You can set the thermal/optical view of the device. **Thermal**, **Fusion**, **PIP**, and **Optical** are selectable.

**Steps**

1. Select from the main menu.

2. Tap on the icons to select a view mode.

In thermal mode, the device displays the thermal view.

In fusion mode, the device displays the combined view of thermal channel and optical channel.

**Note**

You can press ▷ and ◁ to set the fusion distance. Or go to **Local Settings** → **Image Settings** → **Parallax Correction** to select the fusion distance.

In PiP (Picture in Picture) mode, the device displays thermal view inside the optical view.

**Note**

You can press ▷ and ◁ to set the PiP proportion. Or go to **Local Settings** → **Image Settings** → **PiP Proportion** to set the value.

In optical mode, the device displays the optical view.

3. Press to exit.

## 3.4 Set Palettes

The palettes allow you to select the desired colors.

**Steps**

1. Select from the main menu.

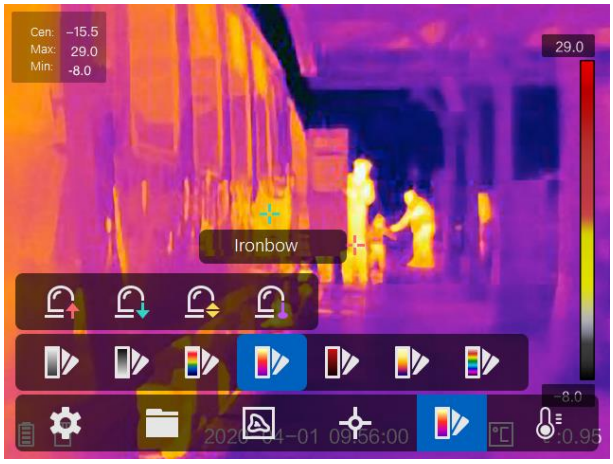


**Figure 3-2 Palette**

2. Tap on the icons to select a palette type.

**White Hot**

The hot part is light-colored in view.

**Black Hot**

The hot part is black-colored in view.

**Rainbow**

The target displays multiple colors, it is suitable for scene without obvious temperature difference.

**Ironbow**

The target is colored as heated iron.

**Red Hot**

The hot part is red-colored in view.

**Fusion**

The hot part is yellow-colored and the cold part is purple-colored in view.

**Rain**

The hot part in the image are colored, and the else is blue.

3. Press to exit the setting interface.

## 3.5 Adjust Digital Zoom

In the live view interface, press ▽ to adjust the digital zoom to 1×, 2×, 4×, or 8×. Then you can view the target or scene in larger size.

## 3.6 Display OSD Info

Go to **Local Settings** → **Image Settings** → **Display Settings** to enable the corresponding icons. Then you can view the device status, time, and target emissivity in live view interface.

# Chapter 4 Temperature Measurement

The thermography (temperature measurement) function provides the real-time temperature of the scene and display it on the left of your screen. The thermography function is turned on by default.

## 4.1 Set Thermography Parameters

You can set thermography parameters to improve the accuracy of temperature measurement.

**Steps**

1. Go to **Local Settings** → **Thermography Settings**.
2. Set the **Thermography Range**, and **Emissivity**, etc.

**Thermography Range**

Select the temperature measurement range. The device can detect the temperature and switch thermography range automatically in **Auto Switch** mode.

**Emissivity**

Refer to ***Common Material Emissivity Reference*** to set the emissivity of your target.

**Reflection Temperature**

If any object (not the target) of high temperature is in the scene, and the target emissivity is low, set the reflection temperature as the high temperature to correct the thermography effect.

**Distance**

The distance between the target and the device. You can customize the target distance or select the target distance as **Near**, **Middle**, or **Far**.

**Environment Temperature**

The average temperature of the environment.

**Humidity**

Set the relative humidity of current environment.

**Note**

Go to **Local Settings** → **Image Settings** → **Display Settings** to enable/disable the emissivity display.

3. Return to previous menu to save the settings.

**Note**

You can go to **Local Settings** → **Device Settings** → **Device Initialization** → **Measurement Tool Initialization** to initialize the temperature measurement parameters.

### 4.1.1 Set Unit

Go to **Local Settings** → **Device Settings** → **Unit** to set the temperature unit and distance unit.

**Note**

You can go to **Local Settings** → **Image Settings** → **Display Settings** to enable/disable the temperature display.

## 4.2 Set Temperature Range

Set a temperature section and the palette only works for targets within the temperature section. You can adjust the temperature range.

**Steps**

1. Select from the main menu.
2. Select auto adjustment or manual adjustment .

| | |
|---|---|
| **Auto Adjustment** | Select , and press OK. The device adjusts temperature range parameters automatically. |
| **Manual Adjustment** | Select , and press OK.<br>● Press ◁ or ▷ to select the max. temperature, min. temperature, or both. You can also tap on the screen to select the max. temperature or min. temperature.<br>● Press △ or ▽ adjust the temperature value. You can also tap on the arrows on the right side of the screen to adjust the temperature value. |

3. Press to exit.

## 4.3 Set Thermography Rule

You can set thermography parameters to improve the accuracy of temperature measurement.

**Steps**

1. Select from the main menu.

2. Set the point, line, or frame rules. See figure below.

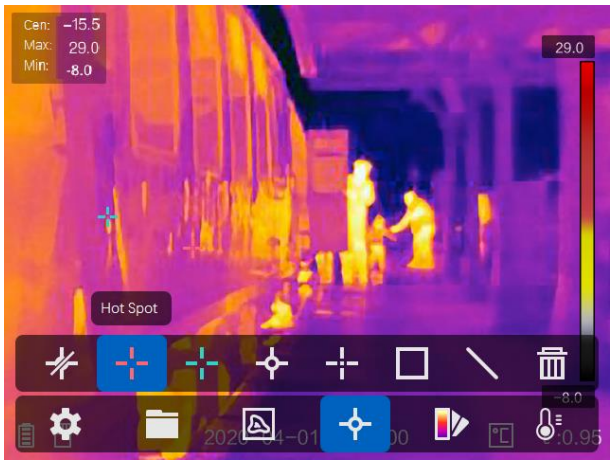


**Figure 4-1 Set Thermography Rule**

## 4.3.1 Set Point Rule

You can set four types of point thermography rules.

**Table 4-1 Icon Description**

| Icon | Description |
|---|---|
| | Center Point Thermography |
| | High-temperature Point Thermography |
| | Low-temperature Point Thermography |
| | Custom Point Thermography |

The setting method of center point, high-temperature, and low-temperature point thermography are all the same. Here is the example of setting high-temperature point thermography.

**Example**

Tap on the interface, the device locates the point of the highest temperature, and displays Max: XX.

### Custom Point Thermography

The device can detect the temperature of a custom point.

**Steps**

1. Select .
2. Press OK.
3. Move the point with the navigation buttons or tap on the touch-screen to select a point.
4. Press OK.

The temperature of custom point (e.g. P1) displays P1: XX.

5. Repeat step 1 to 3 to set other custom points.

**Note**

At most ten custom points supported.

## 4.3.2 Set Line Rule

**Steps**

1. Select ◥.
2. Press OK to generate a default line.
3. Press △, ▽, ◁, and ▷ to move the line up/down/left/right.
4. Drag points of the line on the touch-screen to extend or shorten the line.
5. Press OK.

**Note**

Only one line is supported.

The max. temperature, low temperature, and average temperature of line (e.g. L1) displays L1 Max: XX Min: XX Avg: XX. The real-time temperature trend chart will display.

## 4.3.3 Set Frame Rule

**Steps**

1. Select □.
2. Press OK to generate a default frame.
3. Press △, ▽, ◁, and ▷ to move the frame up/down/left/right.
4. Press ⊘ to enlarge the frame, and press ✱ to contract the frame. Or you can drag the corner of the frame on touch-screen to enlarge or contract the frame.
5. Press OK.
   The max. temperature, low temperature, and average temperature of frame (e.g. S1) displays S1 Max: XX Min: XX Avg: XX.
6. Repeat step 1 to 5 to set other frames.

**Note**

At most three frames are supported.

### 4.3.4 Delete Rules

Tap and press OK to clear all temperature rules. Or tap and choose the single rule you want to delete.

## 4.4 Set Temperature Alarm

Set the alarm rules and the device will alarm when the temperature triggers the rule.

**Before You Start**

Set the palette.

**Steps**

1. Go to **Palettes** from the main menu.
2. Tap the icons to select an alarm rule type.

**Table 4-2 Icon Description**

| Icon | Alarm Mode | Description |
|---|---|---|
| | Above Alarm | Set the alarm temperature, and the device alarms when target temperature is higher than rule temperature. |
| | Below Alarm | Set the alarm temperature, and the device alarms when target temperature is lower than rule temperature. |
| | Interval Alarm | Set the alarm temperature section (e.g., 90 °C to 150 °C), when target temperature is within the section (e.g., 100 °C), the device alarms. |
| | Insulation Alarm | Set the alarm temperature section (e.g., 90 °C to 120 °C), when target temperature is without the section (e.g., 70 °C or 125 °C), the device alarms. |

3. Optional: Press △ and ▽ to select between upper limit and lower limit.
4. Press ◁ and ▷ to adjust the rule temperature.
5. Press to exit.

**Note**

Go to **Local Settings** → **Image Settings** → **Audible Warning** to enable audible warning. The device will sound when alarm is triggered.

# Chapter 5 Picture and Video

Insert memory card into the device, then you can record videos, capture snapshots, and mark and save important data.

**Note**

- Device does not support capturing or recording when the menu is shown.
- When the device is connected to your PC, it does not support capturing or recording.
- Go to **Local Settings** → **Device Settings** → **Filename Header**, you can set the filename header for capturing or recording to distinguish the files recorded in a specify scene.

Go to **Local Settings** → **Device Settings** → **Device Initialization** to initialize the memory card is needed.

## 5.1 Capture Picture

**Steps**

1. Go to **Local Settings** → **Capture Settings**.
2. Select **Capture Mode** to set the capture mode.

| | |
|---|---|
| **Single Capture** | Capture one picture for one time. |
| **Continuous Capture** | Capture multiple pictures for one time. You can set the amount of pictures. |
| **Timed Capture** | Device captures one picture after the specified time interval. You can set the time interval as needed. |

3. Select **Picture Type** to set the picture type.

| | |
|---|---|
| **Offline Picture** | Select this type when analyzing the picture with the client software. You can add remarks on the picture. |
| **Thermal Graphic** | Select this type for custom software development. Remark on the picture is not allowed. |

4. Optional: You can enable flashlight to get clear pictures in dark environment.
5. Optional: Set the optical resolution as needed.
6. Press ⊐ to exit.
7. In the live view interface, pull the trigger to capture snapshot.

**Figure 5-1 Capture Picture**

8. The live view freezes and device displays the capture editing interface.
   1) Tap T to add text remarks. Tap the screen to show the keypad interface, enter the comment and confirm.
   2) Tap to add voice remarks. Hold OK to start recording and release the button to stop recording.
   3) Tap to add thermography rules. Refer to ***Set Thermography Rule*** for details.
   4) Tap or pull the trigger to save the snapshot.

**Note**

You can also press to quit the saving.

9. Refer to ***Export Files*** to export the snapshots.

## 5.2 Record Video

**Steps**

1. In the live view interface, pull the trigger to start recording. The recording icon and count down number display in the interface.

**Figure 5-2 Record Video**

2. When you finish, pull the trigger again to stop recording. The recording video will be saved automatically and exit.

**Note**

You can also press OK or ⮌ to stop recording.

3. Refer to ***Export Files*** to export the snapshots.

## 5.3 View Recorded Files

**Steps**

1. Select ▭ from the main menu.
2. Press △, ▽, ◁, and ▷ to select the video or snapshot.
3. Press OK to view the file.

**Note**

- When you are viewing the videos or capture snapshots, you can switch the file by tapping ◀ or ▶.
- When you are viewing the snapshots, You can tap 🔊 to play the sound. Refer to ***Connect Bluetooth*** to set the bluetooth.
- For more information contained in capture snapshots or videos, you can install the thermography client to analyze them. You can get the thermography client software from the disk packed in box.

## 5.4 Export Files

Connect the device to your PC with supplied cable, you can export the recorded videos and

captured snapshots.

**Steps**

1. Open the cover of cable interface.
2. Connect the device to your PC with cable and open the detected disk.
3. Select and copy the videos or snapshots to PC to view the files.
4. Disconnect the device from your PC.

**Note**

For the first time connection, the driver will be installed automatically.

# Chapter 6 Connect Bluetooth

You can record and hear the sound contained in the videos or images via bluetooth headsets after pairing the device with bluetooth headsets successfully.

**Steps**

1. Select from the main menu.
2. Go to **Local Settings** → **Device Settings** → **Bluetooth**.
3. Tap on to enable the bluetooth.

**Note**

You can also press or **OK** to quit pairing.

The device will search the nearby enabled bluetooth headsets and pair them automatically.

**Result**

After pairing you can record and hear the sound via the headsets while recording and playing the video or image.

# Chapter 7 Light Settings

## 7.1 Set LED Light

Go to **Local Settings** → **Device Settings** → **Light Supplement**. Tap to enable LED light, or press △ in the live view to enable/disable the LED light.

## 7.2 Set Laser

In the live view interface, hold to enable/disable the laser light.

**Caution**

The laser radiation emitted from the device can cause eye injuries, burning of skin or inflammable substances. Before enabling the Light Supplement function, make sure no human or inflammable substances are in front of the laser lens.

# Chapter 8 HIKMICRO Viewer APP Connection

The device supports both Wi-Fi connection and WLAN hot spot. Connect the device to HIKMICRO Viewer client software, and you can control the device via mobile client.

## 8.1 Connect via Wi-Fi

**Before You Start**

Download and install client software on your phone.

**Steps**

1. Go to **Local Settings** → **Device Settings** → **Wi-Fi**.
2. Tap to enable Wi-Fi, and the searched Wi-Fi will be listed as below.

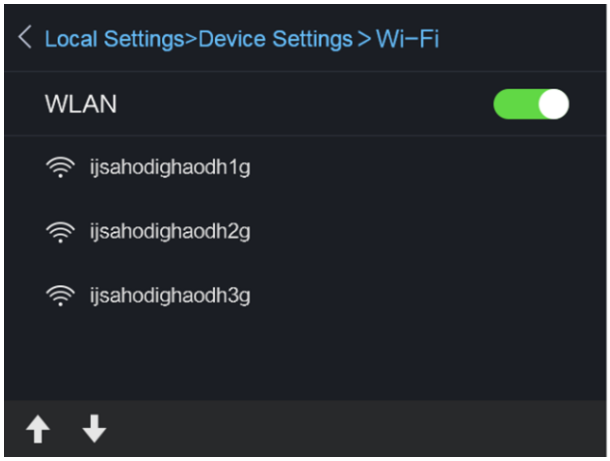


**Figure 8-1 Wi-Fi List**

3. Select Wi-Fi and enter password to show the keypad interface.

**Note**

DO NOT tap **enter** or **space**, or the password may be incorrect.

4. Tap **Close** to hide the keypad.
5. Tap **OK**.
6. Launch the app and follow the startup wizard to create, and register an account.
7. Add the device to online devices.

**Result**

You can view the live view, capture snapshots, and record videos via the client.

## 8.2 Connect via Hot Spot

**Before You Start**

Download and install client software on your phone.

**Steps**

1. Go to **Local Settings** → **Device Settings** → **Wi-Fi Hotspot Settings**.
2. Tap to enable WLAN hot spot function.
3. Tap **Set Hot Spot** to set the WLAN hot spot. The hot spot name and password display automatically.

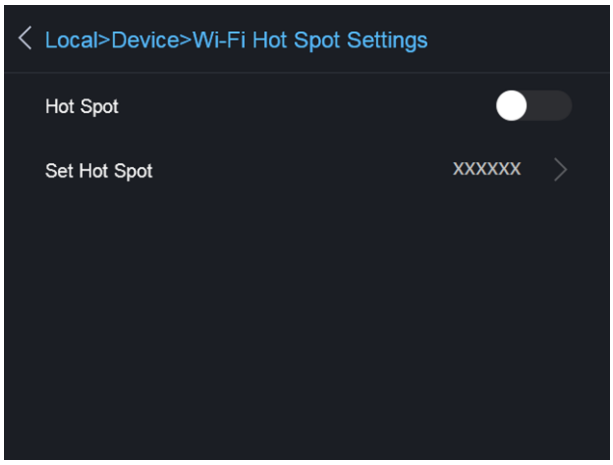


**Figure 8-2 Set Hot Spot**

4. Edit the hot spot name and password, show the keypad interface.

**Note**

DO NOT tap **enter** or **space**, and at least 8 characters, or the password may be incorrect.

5. Tap **Close** to hide the keypad.
6. Connect your phone to the WLAN Hot Spot of the device.
7. Launch the app and follow the startup wizard to create, and register an account.
8. Select Wi-Fi configuration in the software, enter the serial number of device to add the device. Refer to the manual of client software for details.

**Result**

You can view the live view, capture snapshots, and record videos via the client.

# Chapter 9 Maintenance

## 9.1 View Device Information

Go to **Local Settings** → **Device Information** to view the device information.

## 9.2 Set Date and Time

**Steps**

1. Go to **Local Settings** → **Device Settings** → **Time and Date**.
2. Set the date and time.
3. Press ⊐ to save and exit.

**Note**

Go to **Local Settings** → **Image Settings** → **Display Settings** to enable or disable time and date display.

## 9.3 Upgrade Device

**Steps**

1. Connect the device to your PC with cable and open the detected disk.
2. Copy the upgrade file and paste it to the root directory of the device.
3. Disconnect the device from your PC.
4. Reboot the device and then it will upgrade automatically. The upgrading process will be displayed in the main interface.

**Note**

After upgrading, the device reboots automatically. You can view the current version in **Local Settings** → **Device Information**.

## 9.4 Restore Device

Go to **Local Settings** → **Device Settings** → **Device Initialization** to initialize the device and restore default settings.

# Chapter 10 Appendix

## 10.1 Common Material Emissivity Reference

| Material | Emissivity |
|---|---|
| Human Skin | 0.98 |
| Printed Curcuit Board | 0.91 |
| Concrete | 0.95 |
| Ceramic | 0.92 |
| Rubber | 0.95 |
| Paint | 0.93 |
| Wood | 0.85 |
| Pitch | 0.96 |
| Brick | 0.95 |
| Sand | 0.90 |
| Soil | 0.92 |
| Cloth | 0.98 |
| Hard Paperboard | 0.90 |
| White Paper | 0.90 |
| Water | 0.96 |

## 10.2 Device Command

Scan the following QR code to get device common serial port commands.
Note that the command list contains the commonly used serial port commands for Hikmicro thermal cameras.

## 10.3 Device Communication Matrix

Scan the following QR code to get device communication matrix.
Note that the matrix contains all communication ports of Hikmicro thermal cameras.

HIKMICRO

See the World in a New Way