Handheld Thermography Camera

M Series User Manual

Legal Information

©2022 Hangzhou Microimage Software Co., Ltd. All rights reserved.

About this Manual

The Manual includes instructions for using and managing the Product. Pictures, charts, images and all other information hereinafter are for description and explanation only. The information contained in the Manual is subject to change, without notice, due to firmware updates or other reasons. Please find the latest version of this Manual at the HIKMICRO website (***http://www.hikmicrotech.com***).
Please use this Manual with the guidance and assistance of professionals trained in supporting the Product.

Trademarks

HIKMICRO and other HIKMICRO's trademarks and logos are the properties of HIKMICRO in various jurisdictions.
Other trademarks and logos mentioned are the properties of their respective owners.

Disclaimer

TO THE MAXIMUM EXTENT PERMITTED BY APPLICABLE LAW, THIS MANUAL AND THE PRODUCT DESCRIBED, WITH ITS HARDWARE, SOFTWARE AND FIRMWARE, ARE PROVIDED "AS IS" AND "WITH ALL FAULTS AND ERRORS". HIKMICRO MAKES NO WARRANTIES, EXPRESS OR IMPLIED, INCLUDING WITHOUT LIMITATION, MERCHANTABILITY, SATISFACTORY QUALITY, OR FITNESS FOR A PARTICULAR PURPOSE. THE USE OF THE PRODUCT BY YOU IS AT YOUR OWN RISK. IN NO EVENT WILL HIKMICRO BE LIABLE TO YOU FOR ANY SPECIAL, CONSEQUENTIAL, INCIDENTAL, OR INDIRECT DAMAGES, INCLUDING, AMONG OTHERS, DAMAGES FOR LOSS OF BUSINESS PROFITS, BUSINESS INTERRUPTION, OR LOSS OF DATA, CORRUPTION OF SYSTEMS, OR LOSS OF DOCUMENTATION, WHETHER BASED ON BREACH OF CONTRACT, TORT (INCLUDING NEGLIGENCE), PRODUCT LIABILITY, OR OTHERWISE, IN CONNECTION WITH THE USE OF THE PRODUCT, EVEN IF HIKMICRO HAS BEEN ADVISED OF THE POSSIBILITY OF SUCH DAMAGES OR LOSS.
YOU ACKNOWLEDGE THAT THE NATURE OF THE INTERNET PROVIDES FOR INHERENT SECURITY RISKS, AND HIKMICRO SHALL NOT TAKE ANY RESPONSIBILITIES FOR ABNORMAL OPERATION, PRIVACY LEAKAGE OR OTHER DAMAGES RESULTING FROM CYBER-ATTACK, HACKER ATTACK, VIRUS INFECTION, OR OTHER INTERNET SECURITY RISKS; HOWEVER, HIKMICRO WILL PROVIDE TIMELY TECHNICAL SUPPORT IF REQUIRED.
YOU AGREE TO USE THIS PRODUCT IN COMPLIANCE WITH ALL APPLICABLE LAWS, AND YOU ARE SOLELY RESPONSIBLE FOR ENSURING THAT YOUR USE CONFORMS TO THE APPLICABLE LAW. ESPECIALLY, YOU ARE RESPONSIBLE, FOR USING THIS PRODUCT IN A MANNER THAT DOES NOT INFRINGE ON THE RIGHTS OF THIRD PARTIES, INCLUDING WITHOUT LIMITATION, RIGHTS OF PUBLICITY, INTELLECTUAL PROPERTY RIGHTS, OR DATA PROTECTION AND OTHER PRIVACY RIGHTS. YOU SHALL NOT USE THIS PRODUCT FOR ANY PROHIBITED END-USES, INCLUDING THE

DEVELOPMENT OR PRODUCTION OF WEAPONS OF MASS DESTRUCTION, THE DEVELOPMENT OR PRODUCTION OF CHEMICAL OR BIOLOGICAL WEAPONS, ANY ACTIVITIES IN THE CONTEXT RELATED TO ANY NUCLEAR EXPLOSIVE OR UNSAFE NUCLEAR FUEL-CYCLE, OR IN SUPPORT OF HUMAN RIGHTS ABUSES.

IN THE EVENT OF ANY CONFLICTS BETWEEN THIS MANUAL AND THE APPLICABLE LAW, THE LATTER PREVAILS.

Regulatory Information

Note

These clauses apply only to the products bearing the corresponding mark or information.

FCC Compliance Statement

Please take attention that changes or modification not expressly approved by the party responsible for compliance could void the user's authority to operate the equipment. This device complies with Part 15 of the FCC Rules. Operation is subject to the following two conditions:
(1) This device may not cause harmful interference, and
(2) This device must accept any interference received, including interference that may cause undesired operation.
Note: Due to the device size limit, the above statement may not be disclaimed on the device. This equipment complies with FCC radiation exposure limits set forth for an uncontrolled environment.
Note: This product has been tested and found to comply with the limits for a Class B digital device, pursuant to Part 15 of the FCC Rules. These limits are designed to provide reasonable protection against harmful interference in a residential installation. This product generates, uses, and can radiate radio frequency energy and, if not installed and used in accordance with the instructions, may cause harmful interference to radio communications. However, there is no guarantee that interference will not occur in a particular installation. If this product does cause harmful interference to radio or television reception, which can be determined by turning the equipment off and on, the user is encouraged to try to correct the interference by one or more of the following measures:
—Reorient or relocate the receiving antenna.
—Increase the separation between the equipment and receiver.
—Connect the equipment into an outlet on a circuit different from that to which the receiver is connected.
—Consult the dealer or an experienced radio/TV technician for help.

EU/UKCA Conformity Statement

This product and - if applicable - the supplied accessories too are marked with "CE" and comply therefore with the applicable harmonized European standards listed under the EMC Directive 2014/30/EU, RE Directive 2014/53/EU, the RoHS Directive 2011/65/EU

This product and - if applicable - the supplied accessories too are marked with "UKCA" and comply therefore with the following directives: Radio Equipment Regulations 2017, Electromagnetic Compatibility Regulations 2016, Electrical Equipment (Safety) Regulations 2016, the Restriction of the Use of Certain Hazardous Substances in Electrical and Electronic Equipment Regulations 2012.

Frequency Bands and Power (for CE/UKCA)
The frequency bands and transmitting power (radiated and/or conducted) nominal limits applicable to the following radio equipment are as follows:

Equipment Model	Frequency Band and Power
M30 Series*	Wi-Fi 2.4 GHz (2.4 GHz to 2.4835 GHz): 20 dBm Wi-Fi 2.4 GHz (2.4 GHz to 2.4835 GHz): 20 dBm; Wi-Fi 5 GHz (5.15 GHz to 5.25 GHz): 23 dBm; Wi-Fi 5 GHz (5.25 GHz to 5.35 GHz): 23 dBm; Wi-Fi 5 GHz (5.47 GHz to 5.725GHz): 23 dBm; Wi-Fi 5 GHz (5.725 GHz to 5.85 GHz): 14 dBm
M10 Series	Wi-Fi 2.4 GHz (2.4 GHz to 2.4835 GHz): 20 dBm

*For M30 Series, please pay attention to the following notes when the device is operating in 5 GHz: According to Article 10 (10) of Directive 2014/53/EU, when operating in the 5150 to 5350 MHz frequency range, this device is restricted to indoor use in: Austria (AT), Belgium (BE), Bulgaria (BG), Croatia (HR), Cyprus (CY), the Czech Republic (CZ), Denmark (DK), Estonia (EE), Finland (FI), France (FR), Germany (DE), Greece (EL), Hungary (HU), Iceland (IS), Ireland (IE), Italy (IT), Latvia (LV), Liechtenstein (LI), Lithuania (LT), Luxembourg (LU), Malta (MT), Netherlands (NL), Northern Ireland (UK(NI)), Norway (NO), Poland (PL), Portugal (PT), Romania (RO), Slovakia (SK), Slovenia (SI), Spain (ES), Sweden (SE), Switzerland (CH), and Turkey (TR).
In accordance with the Radio Equipment Regulations 2017 in the UK, the device working in the 5150 to 5350 MHz frequency range is restricted to indoor use in the United Kingdom.
Use the power adapter provided by a qualified manufacturer. Refer to the product specification for detailed power requirements.
Use the battery provided by a qualified manufacturer. Refer to the product specification for detailed battery requirements.

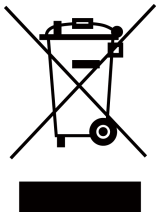

2012/19/EU (WEEE directive): Products marked with this symbol cannot be disposed of as unsorted municipal waste in the European Union. For proper recycling, return this product to your local supplier upon the purchase of equivalent new equipment, or dispose of it at designated collection points. For more information see: www.recyclethis.info

According to the Waste Electrical and Electronic Equipment Regulations 2013: Products marked with this symbol cannot be disposed of as unsorted municipal waste in the United Kingdom. For proper recycling, return this product to your local supplier upon the purchase of equivalent new equipment, or dispose of it at designated collection points. For more information see: www.recyclethis.info.

2006/66/EC (battery directive): This product contains a battery that cannot be disposed of as unsorted municipal waste in the European Union. See the product documentation for specific battery information. The battery is marked with this symbol, which may include lettering to indicate cadmium (Cd), lead (Pb), or mercury

(Hg). For proper recycling, return the battery to your supplier or to a designated collection point. For more information see:www.recyclethis.info

According to the Batteries and Accumulators (Placing on the Market) Regulations 2008 and the Waste Batteries and Accumulators Regulations 2009: This product contains a battery that cannot be disposed of as unsorted municipal waste in the United Kingdom. See the product documentation for specific battery information. The battery is marked with this symbol, which may include lettering to indicate cadmium (Cd), lead (Pb), or mercury (Hg). For proper recycling, return the battery to your supplier or to a designated collection point. For more information see: www.recyclethis.info.

Industry Canada ICES-003 Compliance

This device meets the CAN ICES-003(B)/NMB-003(B) standards requirements.

This device complies with Industry Canada licence-exempt RSS standard(s). Operation is subject to the following two conditions:

(1) this device may not cause interference, and

(2) this device must accept any interference, including interference that may cause undesired operation of the device.

This equipment complies with IC RSS-102 radiation exposure limits set forth for an uncontrolled environment.

*For M30 Series, please pay attention to the following notes when the device is operating in 5 GHz:

(i) The device for operation in the band 5150-5250 MHz is only for indoor use to reduce the potential for harmful interference to co-channel mobile satellite systems;

(ii) The maximum antenna gain permitted for devices in the bands 5250-5350 MHz and 5470-5725 MHz shall comply with the e.i.r.p. limit; and

(iii) The maximum antenna gain permitted for devices in the band 5725-5825 MHz shall comply with the e.i.r.p. limits specified for point-to-point and non point-to-point operation as appropriate.

Le présent appareil est conforme aux CNR d'Industrie Canada applicables aux appareils radioexempts de licence. L'exploitation est autorisée aux deux conditions suivantes :

(1) l'appareil ne doit pas produire de brouillage, et

(2) l'utilisateur de l'appareil doit accepter tout brouillage radioélectrique subi, même si le brouillage est susceptible d'en compromettre le fonctionnement.

ce matériel est conforme aux limites de dose d'exposition aux rayonnements, CNR-102 énoncée dans un autre environnement.

(i)Les dispositifs fonctionnant dans la bande 5150-5250 MHz sont réservés uniquement pour une utilisation à l'intérieur afin de réduire les risques de brouillage préjudiciable aux systèmes de satellites mobiles utilisant les mêmes canaux.

(ii) Le gain d'antenne maximal autorisé pour les appareils dans les bandes 5250-5350 MHz et 5470-5725 MHz doivent respecter le pire limiter; et

(iii) Le gain d'antenne maximal autorisé pour les appareils dans la bande 5725-5825 MHz doivent respecter le pire limites spécifiées pour le point-à-point et l'exploitation non point à point, le cas échéant.

KC

B급 기기: 이 기기는 가정용(B급) 전자파적합기기로써 주로 가정에서 사용하는 것을 목적으로 하며, 모든 지역에서 사용할 수 있습니다.

Symbol Conventions

The symbols that may be found in this document are defined as follows.

Symbol	Description
Danger	Indicates a hazardous situation which, if not avoided, will or could result in death or serious injury.
Caution	Indicates a potentially hazardous situation which, if not avoided, could result in equipment damage, data loss, performance degradation, or unexpected results.
Note	Provides additional information to emphasize or supplement important points of the main text.

Safety Instruction

These instructions are intended to ensure that user can use the product correctly to avoid danger or property loss.

Laws and Regulations

- Use of the product must be in strict compliance with the local electrical safety regulations.

Transportation

- Keep the device in original or similar packaging while transporting it.
- Keep all wrappers after unpacking them for future use. In case of any failure occurred, you need to return the device to the factory with the original wrapper. Transportation without the original wrapper may result in damage on the device and the company shall not take any responsibilities.
- DO NOT drop the product or subject it to physical shock. Keep the device away from magnetic interference.

Power Supply

- Input voltage for device should meet the Limited Power Source (5 VDC, 700 mA) according to the IEC61010-1 standard. Please refer to technical specifications for detailed information.
- Make sure the plug is properly connected to the power socket.
- DO NOT connect multiple devices to one power adapter, to avoid over-heating or fire hazards caused by overload.

Battery

- Improper use or replacement of the battery may result in explosion hazard. Replace with the same or equivalent type only. Dispose of used batteries in conformance with the instructions provided by the battery manufacturer.
- The built-in battery cannot be dismantled. Please contact the manufacture for repair if necessary.
- For long-term storage of the battery, make sure it is fully charged every half year to ensure the battery quality. Otherwise, damage may occur.
- When the device is powered off and the RTC battery is full, the time settings can be kept for 2 months.
- In the first use, power on the device and charge the RTC battery with the lithium battery for more than 8 hours.
- The lithium battery voltage is 3.7 V, and the battery capacity is 5000 mAh.
- The battery is certified by UL2054.

Maintenance

- If the product does not work properly, please contact your dealer or the nearest service center. We shall not assume any responsibility for problems caused by unauthorized repair or maintenance.
- A few device components (e.g., electrolytic capacitor) require regular replacement. The average lifespan varies, so periodic checking is recommended. Contact your dealer for details.
- Wipe the device gently with a clean cloth and a small quantity of ethanol, if necessary.
- If the equipment is used in a manner not specified by the manufacturer, the protection provided by the device may be impaired.
- Please notice that the current limit of USB 3.0 PowerShare port may vary with the PC brand, which is likely to result in incompatibility issue. Therefore, it's advised to use regular USB 3.0 or USB 2.0 port if the USB device fails to be recognized by PC via USB 3.0 PowerShare port.
- We recommend you send the device back for calibration once a year, and please contact the local dealer for the information on maintenance points.

Using Environment

- DO NOT expose the device to extremely hot, cold, dusty, corrosive, saline-alkali, or damp environments. Make sure the running environment meets the requirement of the device. The operating temperature shall be -10°C to 50°C (14°F to 122°F), and the operating humidity shall be 90% or less.
- This device can only be safely used in the region below 2000 meters above the sea level.
- Place the device in a dry and well-ventilated environment.
- DO NOT expose the device to high electromagnetic radiation or dusty environments.
- DO NOT aim the lens at the sun or any other bright light.
- When any laser equipment is in use, make sure that the device lens is not exposed to the laser beam, or it may burn out.
- The device is suitable for indoor conditions.
- The pollution degree is 2.
- Overvoltage category: 0 for Handheld Thermography Camera.
- Overvoltage category: II for power adapter.

Technical Support

The ***https://www.hikmicrotech.com*** portal will help you as a HIKMICRO customer to get the most out of your HIKMICRO products. The portal gives you access to our support team, software and documentation, service contacts, etc.

Emergency

- If smoke, odor, or noise arises from the device, immediately turn off the power, unplug the power cable, and contact the service center.

Laser Light Supplement Warning

Warning: The laser radiation emitted from the device can cause eye injuries, burning of skin or inflammable substances. Prevent eyes from direct laser. Before enabling the Light Supplement function, make sure no human or inflammable substances are in front of the laser lens. The wave length is 650 nm, and the power is less than 1 mW. The laser meets the IEC60825-1:2014 standard. Laser maintenance: It is not necessary to maintain the laser regularly. If the laser does not work, the laser assembly needs to be replaced in the factory under warranty. Keep the device power off when replacing laser assembly. Caution-Use of controls or adjustments or performance of procedures other than those specified herein may result in hazardous radiation exposure.

Manufacture Address

Room 313, Unit B, Building 2, 399 Danfeng Road, Xixing Subdistrict,Binjiang District, Hangzhou, Zhejiang 310052, China
Hangzhou Microimage Software Co., Ltd
COMPLIANCE NOTICE: The thermal series products might be subject to export controls in various countries or regions, including without limitation, the United States, European Union, United Kingdom and/or other member countries of the Wassenaar Arrangement. Please consult your professional legal or compliance expert or local government authorities for any necessary export license requirements if you intend to transfer, export, re-export the thermal series products between different countries.

Contents

Chapter 1 Overview 1
1.1 Device Description 1
1.2 Main Function 1
1.3 Appearance 2
Chapter 2 Preparation 4
2.1 Charge Device 4
2.1.1 Charge Device via Charging Base 4
2.1.2 Charge Device via Cable Interface 5
2.2 Power On/Off 5
2.2.1 Set Auto Power-off Duration 6
2.3 Operation Method 6
2.4 Menu Description 7
Chapter 3 Display Settings 8
3.1 Focus Lens 8
3.2 Set Screen Brightness 8
3.3 Set Display Mode 9
3.4 Set Palettes 9
3.4.1 Set Alarm Mode Palettes 10
3.4.2 Set Focus Mode Palettes 11
3.5 Adjust Digital Zoom 11
3.6 Display OSD Info 11
Chapter 4 Temperature Measurement 13
4.1 Set Temperature Measurement Parameters 13
4.1.1 Set Unit 14
4.2 Adjust Display Temperature Range 14
4.3 Set Temperature Measurement Rule 15

4.3.1 Set Point Rule 15
4.3.2 Set Line Rule 16
4.3.3 Set Area Rule 16
4.3.4 Delete Rules 17
4.4 Temperature Alarm 17
4.4.1 Set Alarms for Exceptional Temperatures 17
Chapter 5 Picture and Video 19
5.1 Capture Picture 19
5.2 Record Video 20
5.3 View Local Files 21
5.4 Export Files 22
Chapter 6 Connect Bluetooth 23
Chapter 7 Light Settings 24
7.1 Set LED Light 24
7.2 Set Laser 24
Chapter 8 Cast Device Screen to PC 25
Chapter 9 Connect Device to Wi-Fi 26
Chapter 10 Set Device Hotspot 27
Chapter 11 Thermal View Mobile Client Connection 28
11.1 Connect via Wi-Fi 28
11.2 Connect via Hot Spot 28
Chapter 12 Maintenance 29
12.1 View Device Information 29
12.2 Set Date and Time 29
12.3 Upgrade Device 29
12.4 Restore Device 29
12.5 Initialize Memory Card 29
12.6 About Calibration 30

Chapter 13 Appendix 31

13.1 Common Material Emissivity Reference 31

13.2 FAQ 31

13.3 Device Command 32

13.4 Device Communication Matrix 32

Chapter 1 Overview

1.1 Device Description

The handheld thermography camera is a device with both optical images and thermal images. It can do thermography, video recording, snapshot capturing, alarm, and it can connect to Wi-Fi, hotspot and Bluetooth. The built-in high-sensitivity IR detector and high-performance sensor detects the variation of temperature and measure the real-time temperature. The temperature measurement range is -20 °C to 550 °C (-4 °F to 1022 °F) with the accuracy of ± 2 °C (± 3.6 °F) or ± 2% when the ambient temperature is 15°C to 35 °C (59 °F to 95 °F) and the object temperature is above 0 °C (32 °F).

The picture-in-picture technique of the camera and the fusion of optical view and thermal view, enhances the details of the images display. It supports multiple palettes and alarm types. When the detected temperature in the scene does not match with the alarm rules, the device alarms by color of the palette mode automatically. It helps to find the risky part and lower your property loss, but it can not be used for human body temperature test.

The device is easy to use, and adopts ergonomic design. It is widely applied to substations, electricity prevention detection of companies, and reconnaissance survey of construction field.

1.2 Main Function

Thermography

Device detects the real-time temperature, and display it on the screen.

Storage

Device is equipped with memory module to store videos, snapshots, and important data.

Fusion

Device can display fusion of thermal view and optical view.

Palette and Alarm

Device supports multiple palettes, and you can set the palette mode according to the alarm function.

Client Software Connection

- Mobile Phone: Use HIKMICRO Viewer to view live image, capture snapshots, and record videos on your phone. You can also, analyze pictures offline, generate and share a report via the app. Scan the QR codes on the cover to download the App.
- PC: Use HIKMICRO Analyzer to analyze pictures offline professionally, and generate a custom format report on your PC. Download the client software from ***https://www.hikmicrotech.com/***

Bluetooth

Device can be connected to headset via Bluetooth, and you can hear the voice in the recording or capture.

Digital Zoom

Device supports 1×, 2×, 4×, and 8× digital zoom.

LED Light

LED light supplement makes the device a torch in required scenarios.

Laser Light

Long-distance laser light supplement.

1.3 Appearance

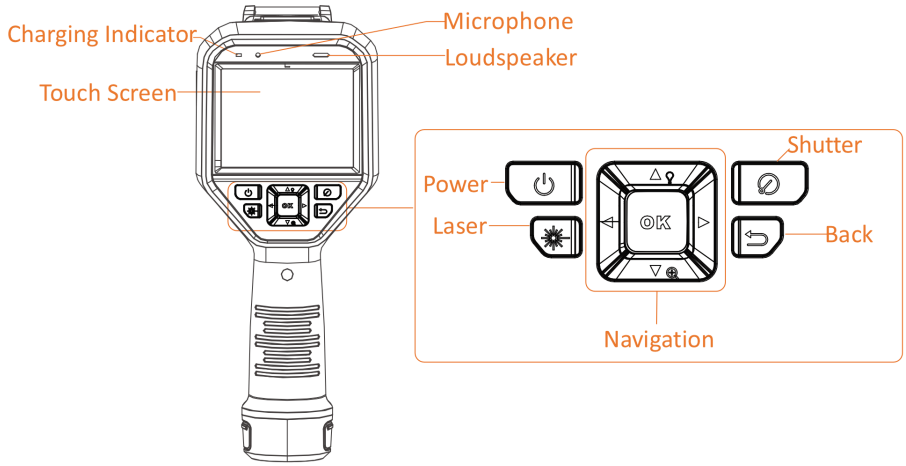

Figure 1-1 Appearance

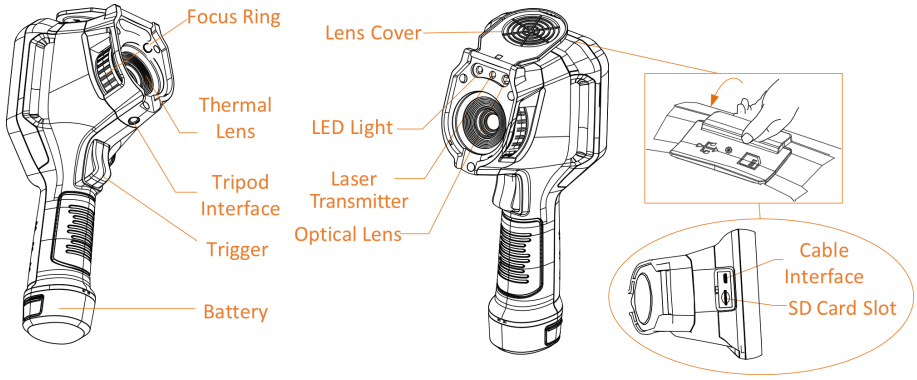

Note

The warning sign is inside the lens cover.

Table 1-1 Interface Description

Component	Function
Laser Button	Hold the button to turn on laser, and release the button to turn off laser.
Navigation Button	Menu Mode: • Press △ , ▽ , ▷ and ◁ to select parameters. • Press ▷ to enter the submenu. • Press ◁ to return to the previous menu. • Press OK to confirm.
	Non-Menu Mode: • Press △ to turn on/off the LED light. • Press ▽ to start digital zoom.
Shutter Button	Cover the lens to perform the correction.
Back Button	Exit the menu or return to previous menu.
Focus Ring	Adjust lens to make the image clear. Refer to ***Focus Lens*** .
Trigger	• Menu Mode: Pull the trigger to return to the live view interface. • Non-Menu Mode: Pull the trigger to capture. Hold the trigger to record videos.
Cable Interface	Charge the device or export files with supplied cable.

Caution

The laser radiation emitted from the device can cause eye injuries, burning of skin or inflammable substances. Before enabling the light supplement function, make sure no human or inflammable substances are in front of the laser lens.

Chapter 2 Preparation

2.1 Charge Device

Caution

The built-in cell battery that powers the real time clock (RTC) of the device may drain during longtime transportation or storage. It is recommended to recharge the RTC battery for the well-functioning of the device clock.

To fully charge the RTC battery, the following requirements should be met:

- The rechargeable lithium batteries should be installed on the device.
- The device should keep working for more than 8 hours before shutting down.

2.1.1 Charge Device via Charging Base

Steps

Note

Please charge the device with the cable and power adapter supplied by the manufacturer (or according to the input voltage from the specifications).

1. Hold the device, and press both battery lock catches of the device.

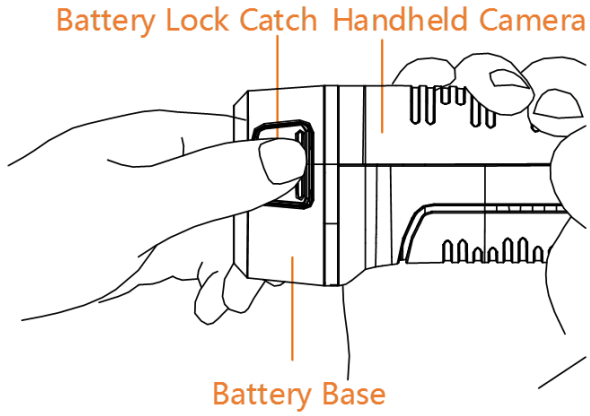

Figure 2-1 Remove Battery

2. Hold the lock catches, and draw the battery base to take out the battery.

3. Insert the battery into the charging base. You can see the charging status via the pilot lamp on the charging base.

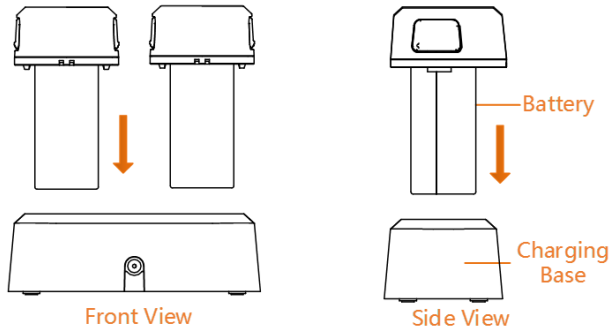

Figure 2-2 Charge Battery

4. When the battery is fully charged, draw the battery from the charging base.
5. Align the ribbed piece on battery with the notch of the device, and insert battery into the device.

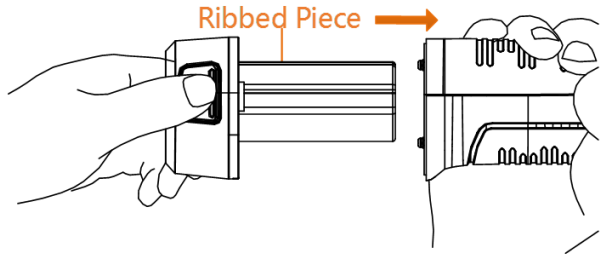

Figure 2-3 Insert Battery

2.1.2 Charge Device via Cable Interface

Before You Start
Please make sure the battery is installed before charging.

Steps
1. Open the top cover of the device.
2. Connect the interface and the power adaptor with Type-C or USB cable.

2.2 Power On/Off

Power On

Remove the lens cover, and hold ⏻ for over three seconds to turn on the device. You can observe the target when the interface of the device is stable.

Note
It may take at least 30 s until the device is ready for using when you power on it.

Power Off

When the device is turned on, hold ⏻ for three seconds to power off the device.

2.2.1 Set Auto Power-off Duration

Go to **Local Settings → Device Settings → Auto Off** to set the automatic shutdown time for device as required.

2.3 Operation Method

The device supports both touch-screen control and button control.

Touch-screen control

Tap on the screen to set parameters and configurations.

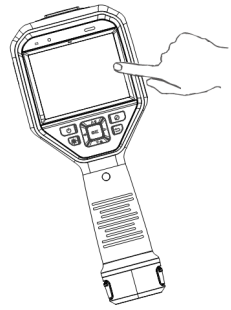

Figure 2-4 Touch-screen Control

Button control

Press the navigation buttons to set parameters and configurations.

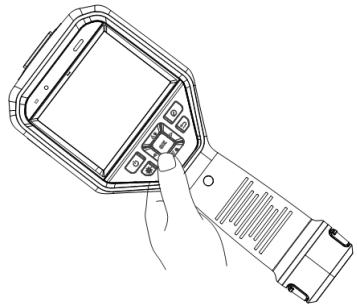

Figure 2-5 Button Control

- Press △ , ▽ , ◁ , and ▷ to select parameters.
- Press ▷ to enter the submenu.
- Press ◁ to return to the previous menu.
- Press OK to confirm.

2.4 Menu Description

In the observation interface, tap the screen or press OK to show the menu bar.

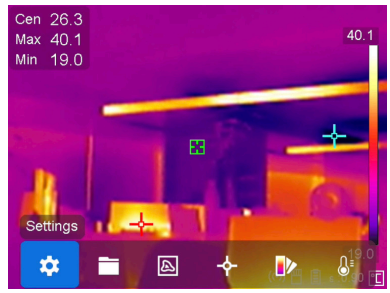

Figure 2-6 Menu

Chapter 3 Display Settings

Note

Your device will periodically perform a self-calibration to optimize image quality and measurement accuracy. In this process the image will pause briefly and you'll hear a "click" as a shutter moves in front of the detector. The self-calibration will be more frequent during start up or in very cold or hot environments. This is a normal part of operation to ensure optimum performance for your device.

3.1 Focus Lens

Adjust the lens focal length properly before you set any other configurations, or it may affect the image display and temperature accuracy.

Steps

1. Power on the device.
2. Aim the device lens to the appropriate scene.
3. Adjust the focus knob clockwise or anticlockwise, see figure below.

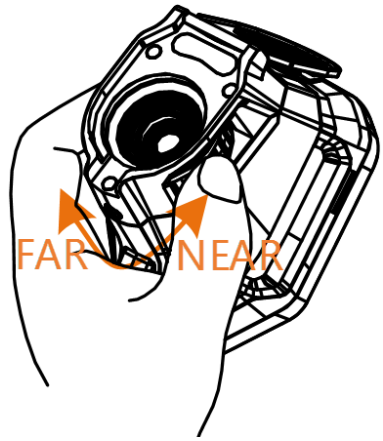

Figure 3-1 Focus Lens

Note

DO NOT touch the lens to avoid affecting the display effect.

3.2 Set Screen Brightness

Go to **Settings → Device Settings → Display Brightness** to adjust the screen brightness.

3.3 Set Display Mode

You can set the thermal/optical view of the device. **Thermal**, **Fusion**, **PIP**, and **Optical** are selectable.

Steps

1. Select from the main menu.

2. Tap on the icons to select a view mode.

In thermal mode, the device displays the thermal view.

In fusion mode, the device displays the combined view of thermal channel and optical channel.

Note

You can press ▷ and ◁ to set the fusion distance. Or go to **Local Settings → Image Settings → Parallax Correction** to select the fusion distance.

In PiP (Picture in Picture) mode, the device displays thermal view inside the optical view.

Note

You can press ▷ and ◁ to set the PiP proportion. Or go to **Local Settings → Image Settings → PiP Proportion** to set the value.

In optical mode, the device displays the optical view.

3. Press to exit.

3.4 Set Palettes

The palettes allow you to select the desired colors.

Steps

1. Select from the main menu.

2. Tap on the icons to select a palette type.

White Hot

The hot part is light-colored in view.

Black Hot

The hot part is black-colored in view.

Rainbow

The target displays multiple colors, it is suitable for scene without obvious temperature difference.

Ironbow

The target is colored as heated iron.

Red Hot

The hot part is red-colored in view.

Fusion

The hot part is yellow-colored and the cold part is purple-colored in view.

Rain

The hot part in the image are colored, and the else is blue.

3. Press to exit the setting interface.

Note

You can also press on the live view interface to change the palettes.

3.4.1 Set Alarm Mode Palettes

Alarm mode palettes allows to mark the targets of certain temperature range with a different color from the rest.

Steps

1. Select **Palettes** from the main menu.

2. Tap the icons to select an alarm rule type.

Table 3-1 Icon Description

Icon	Alarm Mode	Description
	Above Alarm	Set the alarm temperature, and the targets with the temperature higher than the set value are displayed in red.
	Below Alarm	Set the alarm temperature, and targets with the temperature lower than the set value are displayed in blue.
	Interval Alarm	Set the alarm temperature section (e.g., 90 °C to 150 °C), and targets with the temperature in the range are displayed in yellow.
	Insulation Alarm	Set the alarm temperature section (e.g., 90 °C to 120 °C), targets with the temperature out of the section (e.g., 70 °C or 125 °C) are displayed in purple or blue.

3. Optional: Press △ and ▽ to select between upper limit and lower limit.

4. Press ◁ and ▷ to adjust the rule temperature.
5. Press ⊃ to exit.

3.4.2 Set Focus Mode Palettes

Focus mode palettes allows to mark the targets of certain temperature range with fusion palettes and the others with white hot palettes.

Steps
1. Select **Palettes** from the main menu.
2. Tap the icons to select an alarm rule type.

Table 3-2 Icon Description

Icon	Palettes Mode	Description
	Above Focus	Set the temperature threshold, and the targets with the temperature higher than the set value are displayed with fusion palettes.
	Below Focus	Set the temperature threshold, and targets with the temperature lower than the set value are displayed with fusion palettes.
	Interval Focus	Set the temperature range (e.g., 90 °C to 150 °C), and targets in the range are displayed with fusion palettes.

3. Optional: Press △ and ▽ to select between upper limit and lower limit.
4. Press ◁ and ▷ to adjust the rule temperature.
5. Press ⊃ to exit.

3.5 Adjust Digital Zoom

In the live view interface, press ▽ to adjust the digital zoom to 1×, 2×, 4×, or 8×. Then you can view the target or scene in larger size.

3.6 Display OSD Info

Go to **Settings → Image Settings → Display Settings** to enable the information on-screen display.

Status Icon

The device status icons, for example, battery status, memory card, hotspot, etc.

Time

Device time and date.

Parameters

Thermography parameters, for example, target emissivity, temperature unit, etc.

Distance Value

Laser-measured target distance.

Note

It is only supported by device models with laser distance measuring function.

Brand Logo

The brand logo is a manufacturer logo displayed on the upper right corner of the screen. You can turn it off if not needed.

Chapter 4 Temperature Measurement

The thermography (temperature measurement) function provides the real-time temperature of the scene and display it on the left of your screen. The thermography function is turned on by default.

Note

Your device will periodically perform a self-calibration to optimize image quality and measurement accuracy. In this process the image will pause briefly and you'll hear a "click" as a shutter moves in front of the detector. The self-calibration will be more frequent during start up or in very cold or hot environments. This is a normal part of operation to ensure optimum performance for your device.

4.1 Set Temperature Measurement Parameters

You can set temperature measurement parameters to improve the accuracy of temperature measurement.

Steps

1. Go to **Local Settings → Thermography Settings** .
2. Set the **Thermography Range**, and **Emissivity**, etc.

   Thermography Range

   Select the temperature measurement range. The device can detect the temperature and switch thermography range automatically in **Auto Switch** mode.

   Emissivity

   Refer to ***Common Material Emissivity Reference*** to set the emissivity of your target.

   Reflection Temperature

   If any object (not the target) of high temperature is in the scene, and the target emissivity is low, set the reflection temperature as the high temperature to correct the thermography effect.

   Distance

   The distance between the target and the device. You can customize the target distance or select the target distance as **Near**, **Middle**, or **Far**.

   Humidity

   Set the relative humidity of current environment.
3. Return to previous menu to save the settings.

Note

- Go to **Local Settings → Image Settings → Display Settings** to enable/disable the display of temperature measurement parameters.
- You can go to **Local Settings → Device Settings → Device Initialization → Measurement Tool Initialization** to initialize the temperature measurement parameters.

4.1.1 Set Unit

Go to **Local Settings → Device Settings → Unit** to set the temperature unit and distance unit.

Note

You can go to **Local Settings → Image Settings → Display Settings** to enable/disable the temperature display.

4.2 Adjust Display Temperature Range

Set a temperature section and the palette only works for targets within the temperature section. You can adjust the temperature range.

Steps

1. Select **Level & Span** from the main menu.

2. Select **Auto** or **Manual** .

Auto Adjustment	Select , and press OK . The device adjusts display temperature range according to the actual targets temperature automatically.
Manual Adjustment	Select , and press OK . There are 2 ways to adjust the range in this mode: • Adjust the display temperature range based on a selected area. Tap on an interest area of the screen. A circle is displayed around the area, and the palettes readjusts to a temperature range to show as many details of the area as possible. • Set the upper and lower limits of the temperature range manually. a. Press ◁ or ▷ to select the upper limit, lower limit, or both. You can also tap on the temperature boxes at the ends of the palette bar to select them. b. Press △ or ▽ adjust the temperature value. You can also tap on the arrows on the right side of the screen to adjust the temperature value.

3. Press to exit.

4.3 Set Temperature Measurement Rule

You can set temperature measurement parameters to improve the accuracy of temperature measurement.

Steps

1. Select from the main menu.

2. Set the point, line, or area rules.

The configured rule numbers are displayed near the rule icon.

Figure 4-1 Temperature Measurement Rule Settings

4.3.1 Set Point Rule

You can set four types of point temperature measurement rules.

Table 4-1 Icon Description

Icon	Description
	Center Point Temperature Measurement
	High-temperature Point Temperature Measurement
	Low-temperature Point Temperature Measurement
	Custom Point Temperature Measurement

The setting methods of center point, high-temperature, and low-temperature point temperature measurement are all the same. Here is the example of setting high-temperature point temperature measurement.

Example

Tap on the interface, the device locates the point of the highest temperature, and displays Max: XX.

Custom Point Temperature Measurement

The device can detect the temperature of a custom point.

Steps

1. Select .
2. Press OK .
3. Move the point with the navigation buttons or tap on the touch-screen to select a point.
4. Press OK .

The temperature of custom point (e.g. P1) displays P1: XX.

5. Repeat step 1 to 3 to set other custom points.

Note

At most ten custom points are supported.

4.3.2 Set Line Rule

Steps

1. Select .
2. Press OK to generate a default line.
3. Press △ , ▽ , ◁ , and ▷ to move the line up/down/left/right.
4. Drag points of the line on the touch-screen to extend or shorten the line.
5. Press OK .

Note

Only one line is supported.

The maximum temperature, minimum temperature, and average temperature of the line display in the top left corner of the screen. The real-time temperature trend chart will display near the line.

What to do next

Displayed temperature types for the rule are configurable at **Local Settings → Thermography Settings → Temperature Display** .

4.3.3 Set Area Rule

Steps

1. Select .
2. Press OK to generate a default frame.
3. Press △ , ▽ , ◁ , and ▷ to move the frame up/down/left/right.
4. Press to enlarge the frame, and press to contract the frame. Or you can drag the corner of the frame on touch-screen to enlarge or contract the frame.
5. Press OK .

The maximum temperature, minimum temperature, and average temperature of the framed area are displayed on the left of the screen.

6. Repeat steps to set other areas.

Note

At most three areas are supported.

What to do next

Displayed temperature types for the rule are configurable at **Local Settings → Thermography Settings → Temperature Display** .

4.3.4 Delete Rules

Delete All Rules

Tap and press OK to clear all temperature rules.

Delete One Rule

- In the rule setting mode, tap and choose the single rule you want to delete.
- In the observation interface, tap on a rule (point, line or frame) and enter the editing mode. Tap **Delete** to delete the rule.

4.4 Temperature Alarm

When the temperature of targets triggers the set alarm, the device will perform configured actions, such as, flashing the rule frame, making an audible warning, or sending notification to the client software.

4.4.1 Set Alarms for Exceptional Temperatures

Alarm actions, such as, audible warning, sending notification to the client software, are triggered when the tested temperature exceeds the set alarm or alert value.

Steps

1. Go to **Settings → Thermography Settings → Alarm Settings** .
2. Enable the function and set the alarm threshold, alert threshold, and audible warning.

   Alarm Threshold

   When the tested temperature exceeds the threshold, the device sends alarm notification to the client software. It beeps if the audible warning is enabled. The frame flashes red if the frame rule is configured.

   Alert Threshold

   When the tested temperature exceeds the threshold, the device sends alert notification to the client software.

   Audible Warning

The device beeps when target temperature exceeds the alarm threshold.

Alarm Capture

The device captures radiometric images when target temperature exceeds the alarm threshold.

Min. Alarm Interval

It controls the minimal time interval between two alarm information uploading. It helps reduce repeated and frequent information receiving on the part of APP and client software.

Note

If the area rules are set to measure temperature, the alarm threshold, alert threshold and audible warning settings only works in the framed areas. Otherwise, the parameters are valid for pixel-to-pixel temperature measurement (whole-screen temperature measurement).

Chapter 5 Picture and Video

Insert memory card into the device, then you can record videos, capture snapshots, and mark and save important data.

Note

- Device does not support capturing or recording when the menu is shown.
- When the device is connected to your PC, it does not support capturing or recording.
- Go to **Local Settings → Device Settings → Filename Header** , you can set the filename header for capturing or recording to distinguish the files recorded in a specify scene.
- Go to **Local Settings → Device Settings → Device Initialization** to initialize the memory card is needed.

5.1 Capture Picture

Before You Start

- A memory card should be mounted for picture storage.
- Disable QR Code function first.
- Go to **Local Settings → Capture Settings → Flashlight** to enable flashlight in dark environment.

Steps

1. Go to **Local Settings → Capture Settings** .

2. Select **Photo Settings** to set the capture mode.

Single Capture	Capture one picture for one time.
Continuous Capture	Capture multiple pictures for one time. You can set the amount of pictures.
Timed Capture	Device captures one picture after the specified time interval. You can set the time interval as needed.

3. Optional: Set **Visible Image Resolution** for the captured optical image as needed.

4. Optional: Enable **Save Optical Picture**, if you want to save additional optical images when you triggers captures in thermal, PIP, or fusion mode.

5. Press to exit.

6. In the live view interface, pull the trigger to capture snapshot.

7. The live view freezes and device displays the capture editing interface.

1) Tap to add text remarks. Tap the screen to show the keypad interface, enter the comment and confirm.
2) Tap to add voice remarks. Hold OK to start recording and release the button to stop recording.
3) Tap to add thermography rules. Refer to ***Set Temperature Measurement Rule*** for details.
4) Tap or pull the trigger to save the snapshot.

Note

You can also press ⊃ to quit the saving.

What to do next

Tap in menu mode to check saved pictures. See ***View Local Files*** for more information.

5.2 Record Video

Before You Start

- A memory card should be mounted for video storage.
- Go to **Local Settings → Capture Settings → Flashlight** to enable flashlight in dark environment if you want to record an optical video.

Steps

1. Go to **Local Settings → Capture Settings → Video Type** to set the video format.

   Radiometric Video

   Radiometric data is attached in videos of this format. They can only be played and further analyzed with HIKMICRO Analyzer.

   Note

   - The frame rate of this format is 5 fps.
   - A video clip should be no longer than 10 minutes, and its size should be no larger than 4 GB.
   - When the storage space is smaller than 500 MB, radiometric video recording is not allowed. Accidentally stopped recordings are not saved.

   MP4

   Recorded videos are saved in .mp4 format. These video clips can be played on local device, and any player that support this format (HIKMICRO Analyzer does not support playing this video format.).

2. In the live view interface, hold the trigger to start recording.

   The recording signs for radiometric video and MP4 videos are different. When you see 00:00:28 , it is recording a MP4 video. When you see Offline 00:00:28 , it is recording a radiometric video.

3. When you finish, pull the trigger again to stop recording. The video will be saved automatically and exit.

   Note

   You can also press OK or ⊃ to stop recording.

What to do next

Check the saved videos from in menu mode. See ***View Local Files*** for more information.

5.3 View Local Files

Steps

1. Select from the main menu.

2. Press △ , ▽ , ◁ , and ▷ to select video clips or snapshots.

3. Press OK to view the file.

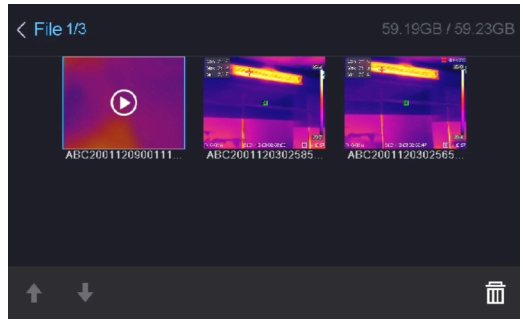

Figure 5-1 View Files

Table 5-1 File Type and Description

File Type	Description
Radiometric videos, format .rv	Radiometric videos clips are not supported playing on the device. To display these videos, you should export the videos to HIKMICRO Analyzer for display and analysis.
MP4 videos, format .mp4	Videos of this format can be played on local device, or exported to play by any other supported player. But, this format can not be played by HIKMICRO Analyzer
Radiometric images, format .jpeg	Images can be viewed on local device, or exported and analyzed in HIKMICRO Analyzer.

Note

- Files are arranged in chronological order, with the most recent at the top. If you fails to find the most recently taken snapshots or videos, please check the time and date settings of your device. See ***Set Date and Time*** for instructions.
- When you are viewing files, you can switch to other files by tapping ← or → .
- When you are viewing snapshots with voice notes, You can tap 🔊 to play the sound. If you want to listen to the recorded sound in MP4 videos or with snapshots by bluetooth earphones or speakers, refer to ***Connect Bluetooth*** for instructions.
- For file exporting, see ***Export Files*** for instructions.
- For file analysis, download HIKMICRO Analyzer from our website ***https://www.hikmicrotech.com/*** .

5.4 Export Files

Connect the device to your PC with supplied cable, you can export the recorded videos and captured snapshots.

Note

Cast screen should be turned off before exporting files. Go to **Local Settings → Device Settings → Cast Screen** to check the function status.

Steps

1. Open the cover of cable interface.
2. Connect the device to your PC with cable and open the detected disk.
3. Select and copy the videos or snapshots to PC to view the files.
4. Disconnect the device from your PC.

Note

For the first time connection, the driver will be installed automatically.

What to do next

You can import the captured snapshots to HIKMICRO Analyzer for further data analysis. See the *User Manual of HIKMICRO Analyzer* (embedded in the client software, **Help → User Manual**) for the operation guide.

Chapter 6 Connect Bluetooth

You can use the bluetooth headset to play the audio recorded together with the videos and the images.

Steps

1. Select ⚙ from the main menu.

2. Go to **Local Settings → Device Settings → Bluetooth** .

3. Tap on ◯ to enable the bluetooth.

Note

You can also press ⮌ or **OK** to quit pairing.

The device will search the nearby enabled bluetooth headsets and pair them automatically.

Chapter 7 Light Settings

7.1 Set LED Light

Go to **Local Settings → Device Settings → Light Supplement** . Tap to enable LED light, or press △ in the live view to enable/disable the LED light.

7.2 Set Laser

In the live view interface, hold to enable/disable the laser light.

Caution

The laser radiation emitted from the device can cause eye injuries, burning of skin or inflammable substances. Before enabling the Light Supplement function, make sure no human or inflammable substances are in front of the laser lens.

Chapter 8 Cast Device Screen to PC

The device supports casting screen to PC by UVC protocol-based client software or player. You can connect the device to your PC via a type-C cable, and cast the real-time live view of the device to your PC.

Steps

1. Go to **Local Settings → Device Settings → Cast Screen** to turn on the function on device.
2. Open the UVC protocol-based client software on your PC.
3. Use a type-C cable to connect your device with PC.

What to do next

For more instructions about how to cast the screen, please visit our website: ***https://www.hikmicrotech.com/***

Chapter 9 Connect Device to Wi-Fi

Steps

1. Go to **Settings → Device Settings → WLAN** .

2. Tap to enable Wi-Fi, and the searched Wi-Fi will be listed as below.

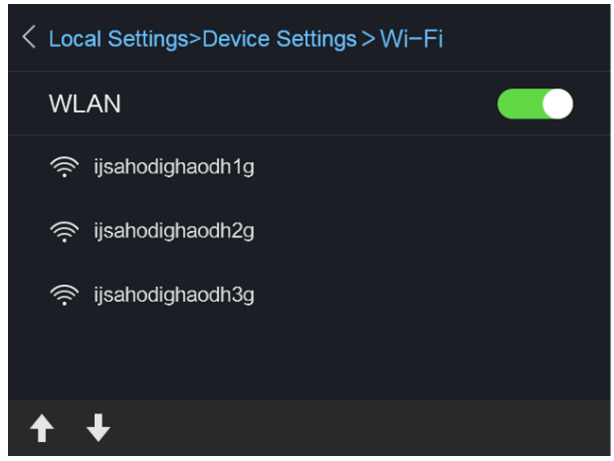

Figure 9-1 Wi-Fi List

3. Select Wi-Fi and enter password.

Note

DO NOT tap **enter** or **space**, or the password may be incorrect.

4. Tap **Close** to hide the keypad.

5. Tap **OK**.

Note

It takes about 1 minute at most to connect the device to the selected Wi-Fi. Leaving the Wi-Fi setting page does not interrupt the connection.

Result

A Wi-Fi icon shows on the main interface when the connection is completed.

Chapter 10 Set Device Hotspot

With the device hotspot, other equipment with Wi-Fi function can join the device for data transmission.

Steps

1. Go to **Settings → Device Settings → Hotspot** .

2. Tap to enable hot spot function.

3. Tap **Set Hot Spot** to set the hot spot name, encryption and password.

Note

- When setting password, DO NOT tap **enter** or **space**, and at least 8 characters, or the password may be incorrect.
- Tap **Close** to hide the keypad after finishing.

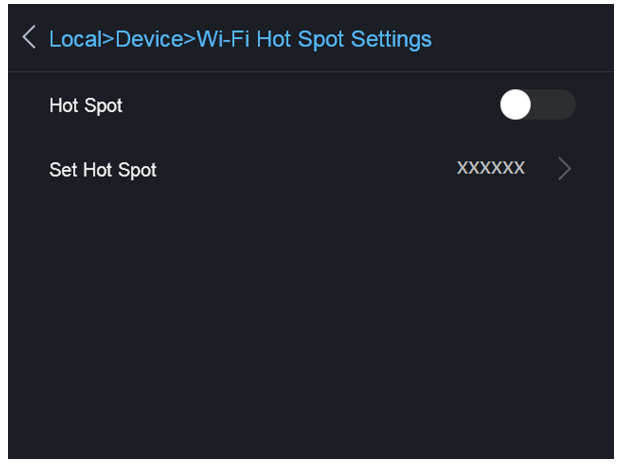

Figure 10-1 Set Hot Spot

Chapter 11 Thermal View Mobile Client Connection

The device supports both Wi-Fi connection and hot spot. Connect the device to HIKMICRO Viewer, and you can control the device via mobile client.

11.1 Connect via Wi-Fi

Before You Start
Download and install HIKMICRO Viewer on your phone.

Steps
1. Connect your device to a Wi-Fi network. See ***Connect Device to Wi-Fi*** for instructions.
2. Connect your phone to the Wi-Fi network that the device is in.
3. Launch the app and follow the startup wizard to create, and register an account.
4. Search and add the device to the mobile client.

Result

You can view the live view, capture snapshots, and record videos via the client.

11.2 Connect via Hot Spot

Before You Start
Download and install HIKMICRO Viewer on your phone.

Steps
1. Turn on the device hop spot and complete hot spot settings. See ***Set Device Hotspot*** for instructions.
2. Connect your phone to the Hot Spot of the device.
3. Launch the app and follow the startup wizard to create, and register an account.
4. Search and add the device to the mobile client.

Result

You can view the live view, capture snapshots, and record videos via the client.

Chapter 12 Maintenance

12.1 View Device Information

Go to **Local Settings → Device Information** to view the device information.

12.2 Set Date and Time

Steps

1. Go to **Local Settings → Device Settings → Time and Date** .
2. Set the date and time.
3. Press to save and exit.

Note

Go to **Local Settings → Image Settings → Display Settings** to enable or disable time and date display.

12.3 Upgrade Device

Steps

1. Connect the device to your PC with cable and open the detected disk.
2. Copy the upgrade file and paste it to the root directory of the device.
3. Disconnect the device from your PC.
4. Reboot the device and then it will upgrade automatically. The upgrading process will be displayed in the main interface.

Note

After upgrading, the device reboots automatically. You can view the current version in **Local Settings → Device Information** .

12.4 Restore Device

Go to **Local Settings → Device Settings → Device Initialization** to initialize the device and restore default settings.

12.5 Initialize Memory Card

When a memory card is use on the handheld thermal camera for the first time, it needs to be initialized first.

Go to **Local Settings → Device Settings → Device Initialization** to initialize the memory card.

Caution

If there are files in the memory card, make sure that the files has been backed up before memory card initialization. Once the card is initialized, data and files can not be recovered.

12.6 About Calibration

We recommend you send the device back for calibration once a year, and please contact the local dealer for the information on maintenance points. For more detailed calibration services, please refer to ***https://www.hikmicrotech.com/en/calibrationservices/2*** .

Chapter 13 Appendix

13.1 Common Material Emissivity Reference

Material	Emissivity
Human Skin	0.98
Printed Circuit Board	0.91
Concrete	0.95
Ceramic	0.92
Rubber	0.95
Paint	0.93
Wood	0.85
Pitch	0.96
Brick	0.95
Sand	0.90
Soil	0.92
Cloth	0.98
Hard Paperboard	0.90
White Paper	0.90
Water	0.96

13.2 FAQ

Scan the following QR code to get device common FAQ.

13.3 Device Command

Scan the following QR code to get device common serial port commands.

Note that the command list contains the commonly used serial port commands for HIKMICRO thermal cameras.

13.4 Device Communication Matrix

Scan the following QR code to get device communication matrix.

Note that the matrix contains all communication ports of HIKMICRO thermal cameras.

HIKMICRO

See the World in a New Way

UD29957B